LESSMANN®

THE GERMAN BRUSH COMPANY

CATALOGUE 2019

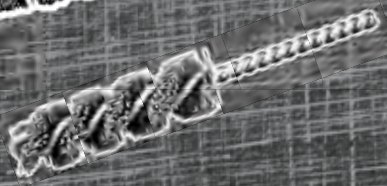

QUALITY MADE IN GERMANY

LESSMANN®
THE GERMAN BRUSH COMPANY

4 - 7 Information

8 - 13 Technology, Material and Safety

14 - 41 **Wheel Brushes**

Knot Wheel Brushes, Joint Cleaning Brushes, Pipeline Brushes, Single Segment Brushes, Wheel Brushes, Special Wheel brushes, Accessories

42 - 51 **Deburring Brushes**

Deburring Brushes, Roller Brushes, Deburring End Brushes

52 - 65 **Cup and Bevel Brushes**

Cup Brushes, Bevel Brushes, Brushes for grass trimmers

66 - 81 **Shank Brushes**

Shank Wheel Brushes, Cup Brushes with Shank, End Brushes, Miniature Brushes

82 - 99 **Hand Brushes and Brooms**

Standard Hand Brushes, Spark Plug Brushes, Fine Scratch Brushes, Special Models, Brooms and Scrubs, Dusters, Weed Brushes and Brooms

100 - 121 **Interior Brushes**

Mikro Interior Brushes, Cylinder Brushes, Sleeve Brushes, Stove Pipe Brushes, Boiler Brushes, Fitting Brushes, Brushes and Scratchers

122 - 131 **DIY Brushes and Sales Promotion**

Do It Yoursel Brushes, Packaging and Presentation, Sales Promotion

132 - 147 **Industrial Brushes**

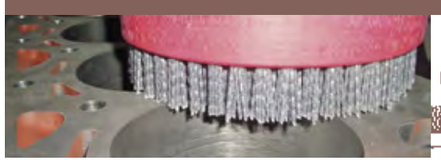

Brushes with carbon fibre, Disc Brushes, Lath Brushes, Wheel and Roller Brushes, Strip Brushes

148 - 151 Article Numbers

151 Keyword Index

THE GERMAN BRUSH COMPANY

Dear customers,
dear interested parties,

for more than 70 years, the name LESSMANN stands for a medium-size family business with high-quality surface finishing tools "Made in Germany". We thank our partners and valued customers for their support! Through seven decades of experience we are able to provide you with the highest quality and innovative products. The latest knowledge and ideas are combined in-house and implemented to first-class products for our customers worldwide.

Retailers receive a wide assortment of **standard goods** for fair prices. **Industrial customers** may expect **custom-made products** which agree upon the special demands in their production processes. Permanent product improvements, working with innovative raw materials and being willed to break through technical limits again and again brings us new possibilities to create the best solutions for you.

Therefore we are pleased to present the new catalog of Lessmann this year. Not only the catalog design is updated, we also added more interesting products to our **catalog range**. For example, on page 24 we provide brushes for the cut-back application or on page 64 you will find brushes for low-sparking applications. In addition, all technical drawings have been optically revised and provide you with a better overview of the specified dimensions.

Last year we also invested in our Oettingen site again and expanded capacities, we schedule delivery dates even more precisely and produce and operate even more efficiently.
Steady service, fast response, selected suppliers and a constantly growing know-how of our qualified and committed employees – with these values we also would like to remain your professional partner for technical brushes as "THE GERMAN BRUSH COMPANY".

For the achievements and decisions we stand with our name.

Your

Jürgen Lessmann Dieter Lessmann

LESSMANN®
THE GERMAN BRUSH COMPANY

QUALITY, FAIRNESS, RELIABILITY

To do the right things to the right time: the success of our company nowadays is based on contributions and entrepreneurial decisions in the past. This day, we, as a family enterprise in the third generation, are facing new customer demands and market statues, react flexible and work efficient, to gear our company up for the future!

Quality, Fairness and Reliability are the most important values in the relation to our customers and partners, since Johann LESSMANN and its children Edgar and Traudel founded a small brush factory in Oettingen.

Strict quality management, uncompromising customer orientation and decades of experience make up the foundation of our success. One of the most important strengths are our 240 qualified and motivated employees, who are willing to get into new challenges, react flexible and to bring in their knowledge und competence. That's how we work together to have a mutual success.

THE GERMAN BRUSH COMPANY

FUTURE-ORIENTED INVESTMENT

An important investment into the future is the construction of our new 4,200 sqm production hall in 2013: this step is a visible sign of our stable growth. We set another milestone in 2016 by the enlargement of our high rack storage area. These steps are a visible sign of our stable growth.

Besides the new building shows our intention to assure our position as leading technological and qualitative company and to strengthen it by opening new markets! Furthermore we have more space and capacities for producing more industrial special solutions – of course in our usual best quality and accuracy!

MADE IN GERMANY

Quality made in Germany. For LESSMANN that does not only mean, that all our products are manufactured in Bavaria, but also the huge part of all raw materials as filament, wood, metal or plastics are purchased from renowned suppliers in Germany.

We manufacture almost all products in a broad standard program on our own. That's why already the quality of the raw materials has a significant role. Intensive test of the materials and inspections during production, build up two important values of the reliable LESSMANN-quality.

The headquarters in Germany requesting us to be the pioneer when using modern technology and automation. Thus our customers can receive the best quality at competitive prices.

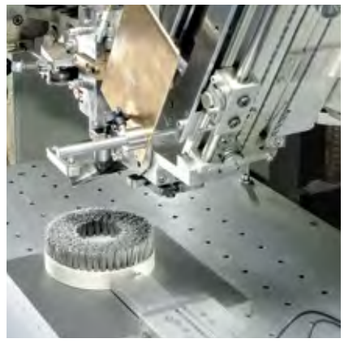

PEFC Certification System

PEFC is a transparent and independent certification system to ensure sustainable forest management. Due to the regional approach, the system is particularly suitable for all forest owners, especially the family forest enterprises typical in Germany. An inspection is carried out by independent experts and ensures compliance with the standards.
Lessmann uses PEFC certified wood, e. g. in hand brushes that come from a regional forest that is managed sustainable or complies with PEFC standards.

PEFC
PEFC/04-31-0389

Promoting sustainable forest management
www.pefc.de

LESSMANN®
THE GERMAN BRUSH COMPANY

FIT FOR THE GLOBE

First-class quality products, expertise and a high flexibility – our innovative technical brushes are "Fit for the Globe".

Depending on the country we work with our own employees, regional importers or authorised retailers. Our export department has the accurate know-how, to consult and satisfy the demand of our customers globally.

In 2016 we launched a foreign branch in the USA. The „LESSMANN Inc." guarantees optimal service and logistics and our approved first-class products on the American market.

PERFECT SERVICE FOR PERFECT PRESENTATION

The brand LESSMANN signifies quality and gives clearly structured information.

Please have a look at our home page in the internet!
On www.lessmann.com you will find our latest catalogue as well as leaflets to download. Further technical advice as well as operating instructions are available.

Self-service Tool Bar Displays
Take advantage of our experience and use this idea that will lead to successful and increased sales.

INDIVIDUAL SOLUTIONS FOR SPECIAL APPLICATIONS

Often technical brushes for very special applications are requested. Devarnishing surfaces or rounding burrs. Each application is different and a standard tool could not be used in each case.

Every day we develop new brushes for industrial demands. In the majority of the cases, the aim of the operator is to increase productivity. Our experienced consultants will help you to make the right choice and to find the appropriate design of the brushes for your individual needs.

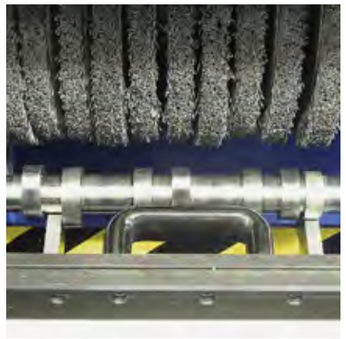

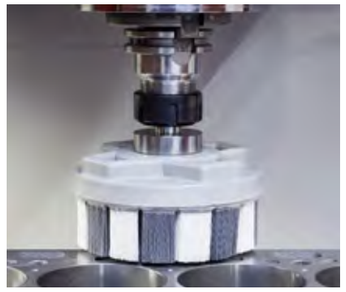

"SIMPLY THE BEST" BY TESTING

Our own production of nearly all components of our standard programme and our own development of special articles enables us to have an excellent knowledge in both manufacturing quality and safety testing.

Creating Innovation,
Exceeding Safety Standards,
Keeping Top Quality

With this motivation we make complex development and product tests as an essential part of our work.

Material Tests
These are the first steps of our quality management: All deliveries of raw material are tested according to and above specification details. All wires are tested for their tensile strength and for their reverse bending strength by a fatigue measuring process.
Beside the quality of the material it is important that its attributes are as suitable as possible for their intended use.

Imbalance Test
An imbalance of machine driven brushes is not pleasant and is dangerous for the health of persons working at the machine.
Although it is not necessary under the DIN or the EN Norms, we produce our brushes according to our own standards for minimum imbalance. By doing so our customers take advantage of smooth running fatigue reducing brushes. Our employees in production ensure that these high quality aspects are maintained.

Safety Tests
According to European safety norms all brushes have to with-stand 1.5 times of the mentioned maximum RPM. Naturally when developing a brush, we test every brush type for this safety aspect. Only if all tests are satisfactory, can the article be produced. During production many samples are taken of the brushes in order to check the required safety speed. Should a model or a raw material be changed we begin the tests again. For this very reason every customer can rely on a high quality and safe tool.

Lifetime and Power
For the measurement of the lifetime and power of technical brushes there are neither norms nor standard procedures. After long developing processes and many tests we have found testing methods that simulate testing in real working conditions. On self built machines we are able to test the abrasion and thus the lifetime and power of machine driven brushes.
Beside the quality aspect these tests are helpful in optimising materials used, as well as component parts and the construction of brushes. Even if in comparison tests with competitor brushes such testing has shown and proved the high quality of our products:

We keep on testing to guarantee customer satisfaction.

Quality is our feature!

Accredited with DIN EN ISO 9001:2015

RECOMMENDATIONS FOR SAFE BRUSH USE

LESSMANN Quality is Safe
We guarantee the best quality and long lifetime for our products.
Our brushes are manufactured according to the existing standard EN 1083-2 and ANSI 165.1. All the relevant machine driven brushes are checked for occupational safety using a centrifugal force test.

Safety Information
All machine driven brushes require as with other rotary tools, that the required safety precautions are kept:

Safety for Your Body
All operators and other personnel in areas where rotary brushes are being used must wear safety goggles or face shields and protective clothing.

For your own safety:
Wear personal protective equipment

Brush Check
The brushes should be checked for damage before using.

A correct mounting is imperative.

Peripheral Speed
The max. RPM indicated in the catalogue are safety figures by which the brushes can be used without danger. Please do not exceed these figures under any circumstances! In most cases a lower RPM is sufficient to gain an optimal result.

Correct Pressure
The schedule shows the necessary motor drive power for different brush diameters. The brushes need only a light pressure while brushing because only the wire points are effective (please look at the schedule). A higher pressure does not improve the brushing effect. In fact the brush lifetime is reduced and greater power is needed. The indicated curves inform you about the expected power. The power ratings refer to a brush with 30 mm width.

Working with Shank Brushes
When working with shank brushes please note that the shank has to be inserted fully into the tool.
This is especially necessary when working with high RPM, for example on straight grinders and pneumatic tools.

Mechanical Application
Only use the brush with the indicated maximal peripheral speed (RPM max.). The max. RPM only is allowed when the brush is clamped min. for 10 mm into the tool. When the brush is inserted into the suitable work piece, higher RPMs are possible. **Only use the brush right rotating.**

Correct

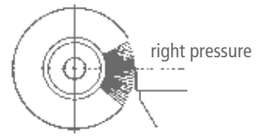

Incorrect

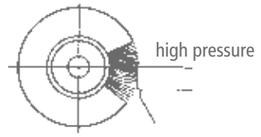

Machine usage:
These symbols in the chapters show on which machines the brushes usually are used.

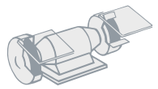

Stationary equipment

Angle grinder

Straight grinder

Drilling machine

Grass trimmer

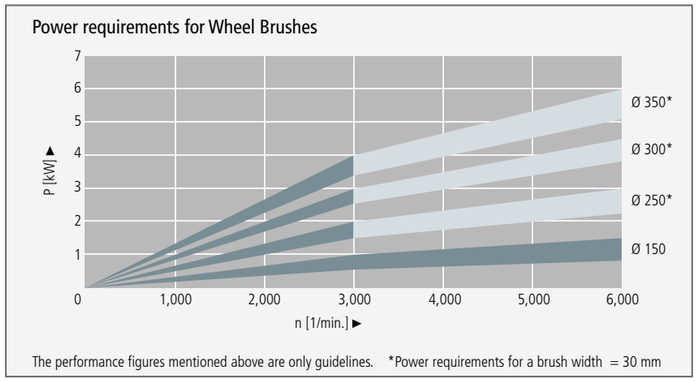

The performance figures mentioned above are only guidelines. *Power requirements for a brush width = 30 mm

minimum bore size for wheel brushes according to DIN EN 1083

Diameter of the brush in mm	Minimum diameter of bore in mm
50	4.6
75	6.5
100	10
150	13
200	16
250	20
300	20
350	32

Recommended use of brushes on angle grinders – the right combination

Common idle speed of angle grinders (WS)	Brush diameter	60	65	75	80	90	100	115	125	150	178	200
	Knot Wheel Brush						WS 1	WS 1	WS 2	WS 3	WS 4	WS 5
Ø 115 11,000 RPM = WS 1	Cup Brush, Crimped Wire	WS 2		WS 2	WS 3		WS 3		WS 5	WS 5		
Ø 125 11,000 RPM = WS 2	Knot Cup Brush without Bridle		WS 1	WS 2	WS 2	WS 2	WS 3/4		WS 5			
Ø 150 9,000 RPM = WS 3	Knot Cup Brush with Bridle				WS 3/4		WS 3/4		WS 5			
Ø 180 8,500 RPM = WS 4	Knot Bevel Brush						WS 1					
Ø 230 6,500 RPM = WS 5	Knot Bevel Brush						WS 1	WS 1				

Warning: Before each operation please compare the idle speed of the angle grinder with the max. peripheral speed of the brush!

PRODUCING QUALITY – BRUSHING THE CORRECT WAY

Optimise Brush Results
The brush diameter and filling length are most important for the perfect brushing result. It is therefore very easy to eliminate almost all bad brushing results:

Brushing effect too weak:
- Increase the peripheral speed by increasing the brush diameter or the operating speed, but never exceed the maximum RPM rating.
- Use a brush with shorter trim length.
- Use a brush with larger wire diameter.

Brushing effect too powerful:
- Reduce the peripheral speed by reducing the brush diameter or the operating speed.
- Use a brush with longer trim length.
- Use a brush with smaller wire diameter.

Brush transfers burr:
- Use a brush with shorter trim length.
- Examine brush and work piece position.
- Use a brush with wider face.
- Use a brush with thicker wire diameter.

Information for brushing on stainless steel materials you find at **www.lessmann.com**

Note: you are welcome to contact our technical contact persons.

Recommended Peripheral Speed for Brushing Application

	Peripheral Speed in m/s							
Application	15	20	25	30	35	40	45	50
With Filaments								
Removing Burrs				25 - 35				
Cleaning Welds						35 - 45		
Removing Scale						35 - 45		
Polishing					30 - 40			
Working on Plastic	15 - 20							
With Abrasive Filaments								
Dry conditions	16 - 18							
Wet conditions			25 - 30					

Conversion mm in Inches and I.S.W.G.

Brush diameter	
Millimeter	Inches
25	1"
50	2"
75	3"
100	4"
125	5"
150	6"
180	7"
200	8"
250	10"
300	12"
350	14"

Wire diameter		
Millimeter	Inches	I.S.W.G
0.08	0.0031	44
0.10	0.0039	42
0.12	0.0047	40
0.15	0.0059	38
0.20	0.0079	36
0.25	0.0098	33
0.30	0.0118	31
0.35	0.0138	29
0.40	0.0157	27
0.50	0.0197	25
0.80	0.0315	21

Peripheral Speed v in m/sec. (please follow the max. rotary speed of the brush!)

n [1/min.]	Brush diameter d in mm/inches							
(RPM)	50 2"	80 3"	100 4"	125 5"	150 6"	200 8"	250 10"	300 12"
1,000		4.2	5.2	6.5	7.9	10.5	13.1	15.7
1,500	3.9	6.3	7.9	9.8	11.8	15.7	19.6	23.6
2,000	5.2	8.4	10.5	13.1	15.7	20.9	26.2	31.4
2,500	6.5	10.5	13.1	16.4	19.6	26.2	32.7	39.3
3,000	7.9	12.6	15.7	19.6	23.6	31.4	39.3	47.1
3,500	9.2	14.7	18.3	22.9	27.5	36.7	45.8	55.0
4,000	10.5	16.8	20.9	26.2	31.4	41.9	52.4	62.8
5,000	13.1	20.9	26.2	32.7	39.3	52.4	65.4	78.5
6,000	15.7	25.1	31.4	39.3	47.1	62.8	78.5	
8,000	20.9	33.5	41.9	52.4	62.8	83.8		
10,000	26.2	41.9	52.4	65.4	78.5			
12,500	32.7	52.4	65.4	81.8				
15,000	39.3	62.8	78.5					
20,000	52.4	83.8						
25,000	65.4							

$$\text{Peripheral Speed} \quad v = \frac{\text{Brush diameter (d)} \times \pi \times \text{Peripheral Speed (n)}}{1{,}000 \times 60}$$

For **working in wet condition** we recommend **PA 6.12** as base. Please state on your order! Since the upcoming heat on wet applications is conducted, the peripheral speed can be set much higher than on dry applications.

BRUSH FILLING MATERIALS AND THE CHARACTERISTICS

STA Steel Wire straight / crimped
is developed in co-operation with wire producers, so that it meets our special requirements. This wire is alloyed with manganese in order to increase its toughness. Result is higher tensile strength and longer lifetime of LESSMANN-Brushes.

STH Steel Wire High Tensile straight / crimped
is most often used in Knotted Brushes, Deburring Brushes and Pipeline Brushes. Furthermore we offer this high tensile wire in our complete assortment. Above all it features through its tensile strength and high fatigue rates, what results in lifetime even for extreme brushing applications.

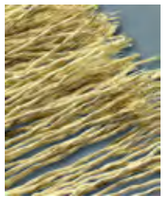

STM Brass Coated Steel Wire
For long lifetime plus high tensile strength and cutting performance. Best results in brushing and deburring applications.

STL Cord Wire
Brass coated steel wire corded. Longest lifetime for heavy duty brush applications e. g. deburring.

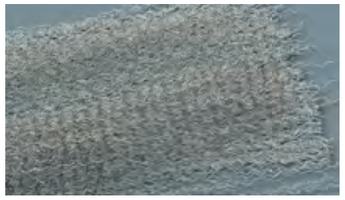

ROF / RO4 / ROL / RO8 Stainless Steel Wire
ROF must be used when working on stainless steel. Material number (WNr.) **1.4301 (AISI 304)**. This wire is resistant against corrosion and certain acids and bleaches.
RO4 Premium-quality stainless steel wire. WNr. **1.4401 (AISI 316)**
RO8 High heat resistant stainless steel wire. WNr. **1.4860**.
ROL Stainless Steel Wire with cord construction WNr. **1.4301/1.4310**

ROH Stainless Steel Wire High Tensile
This wire is characterized by a high tensile strength 2100 – 2500 and a long lifetime even in extreme applications. WNr. **1.4310 (AISI 301)**

Further information on brushing on stainless steel materials you find at **www.lessmann.com**

MES Brass Wire (CuZn)
is softer than steel wire. Among other applications brass wire is suitable for working with mild bleaches. It's mainly used for processing of nonferrous metals.

straight / crimped / knotted: Metal wires for brushes can be processed in brushes straight, crimped or knotted. Wire knots are always made with straight wires. Compared to a straight wire with the same diameter the wire knots are much stronger than the single wire. Crimped wires brace each other and therefore achieve a better stability in the brushes.

BRUSH FILLING MATERIALS AND THE CHARACTERISTICS

BRO Bronze Wire (CuSn)
is used for surface processing of wood and metal. It's also used when low-sparking brushes are needed.

NSI Nickel Silver (CuNiZn)
is used for polishing work pieces e. g. parts of nickel silver or brass, as it is softer than steel wire.

PP, PA, PE Synthetic Filaments
are resistant to abrasion and flexible. Despite minor resistance against heat these filaments are perfect for cleaning, grinding or surface pro-
cessing of metal, plastic or wood.
Available are:
- Polypropylen (PP)
- Polyamid (PA) - PA 6, PA 6.6, PA 6.12
- Polyethylen (PE)

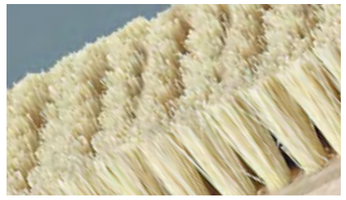

FIB Fibre
consists of heat resistant plant fibre, is slightly abrasive and therefore can be used for smooth grinding, above all for working on wooden surfaces. Moreover fibre is used for general cleaning and polishing work.

ROS Horse Hair
is an animal hair, which above all is deployed in terms of light cleaning and dusting work. Horse hair is resistant against diluted acids and bleaches. It's not chargeable for static electricity.

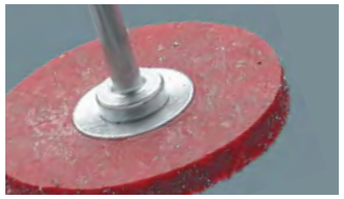

Encapsulated Brushes
Encapsulated brushes are ideal for an aggressive work on working pieces and for a very exact working in edges and angles.
By embedding steel wire, stainless steel wire, brass coated wire or brass wire in tough plastic, the filling width always remains the same and early break of the wires can be prevented. It's the perfect tool for long lasting and safe working. The advantages when working with encapsulated brushes are longer lifetime and harder brush effect.
Furthermore the risk of injury declines when using encapsulated brushes.
However, it might be possible that the brush will leave marks on the work piece.

3 grits in silicon carbid

Abrasive Filaments
consist of polyamide bristles containing abrasive grits. This modern material is ideal for deburring work, fine surface finishing of plastic and metal parts as well as grinding, cleaning, polishing, and structuring of surfaces. With their flexible surface, brushes with abrasive filament align to the different shape of working pieces. Abrasive bristles also have grinding effects on the side, which makes them even more flexible to application possibilities. You can choose between grit (from K60 to K1000) composed of aluminium oxide (AO) and silicon carbide (SIC). Also diamond filament is available.

Normally 2 polyamide-types are used:
Polyamide PA 6:
- good bend recovery
- good abrasion resistance
- absorption of water to max. 10%

Polyamide PA 6.12 (ideal when working in wet surrounding):
- flexible and excellent bend recovery
- high abrasion resistance
- absorption of water to max. 3%

You can differ the bristles between round or flat bristles. Usually round bristles are used, because they are more flexible than flat bristles and very good for processing work pieces with strong shapes. Round bristles with a smaller diameter, less than 150 mm, are very efficient if you are not able to use flat material.
However, flat bristles possess a high abrasive grit, represent a long durability and a high removal rate by a larger contact surface.

Grits to choose from:

Abrasive filaments SIC (filament K60 to K1000):
- intensive results when deburring
- for surficial improvement/-processing
- mainly for process stainless steel and aluminium limited
- microhardness: 25.000 N/mm²

Common measurements: K 80/1,1, K 80/1,2, K 80/1,4, K 120/0,6, K 120/1,1, K 180/0,9, K 180/1,0, K 320/0,60, K 500/0,5

Abrasive filaments AO (filament K60 to K1000):
- less sharp-edged compared to SIC
- to the finish of soft metal
- to polishing and smoothing
- to process aluminium when smoothing or polishing
- microhardness: 21.000 N/mm²

Common measurements: K 80/1,2, K 120/1,1, K 180/0,9, K 180/1,0, K 240/0,75, K 240/0,90, K 320/0,60, K 500/0,25, K 500/0,50, K 600/0,3 – others on request.

Diamonds filaments(filament K60 to K1000):
- for aggressive applications
- used for materials with high material strength
- self-renewing through independent sharpening
- microhardness: 42.000 N/mm²

Ceramic grit:
- very good grinding and polishing properties
- maximum lifetime and aggressiveness
- working with hard metal tools
- microhardness: 42.000 N/mm²

By ordering our standard grit, also with small quantities you receive short delivery times!
The chemical components of nylon please find at **www.lessmann.com**

Physical Characteristics

	STA	STH	ROF	ROH	RO4	RO8	STM / STL	MES
WNr.			1.4301	1.4310	1.4401	1.4860		CuZn36 / CuZn37
AISI			304	301	316			
Tensile Strength in N/mm²*	1,800 - 2,100	2,300 - 2,500	1,800 - 2,100	2,100 - 2,500	1,600 - 1,800	1,600 - 1,800	2,300 - 2.600	900 - 1,200
Specific Gravity in g/cm³	7,85	7,85	7,85	7,85	7,85	7,90	7,85	8,50
Temperature Consistancy in °C	+ 300 °C	+ 300 °C	+ 450 °C	+ 450 °C	+ 500 °C	+ 600 °C	+ 300 °C	+ 180 °C

*The specified Tensile Strength is applicable for a wire strength 0.3 - 0.4 mm

LESSMANN®
THE GERMAN BRUSH COMPANY

WHEEL BRUSHES

Knot Wheel Brushes

Knot Wheel Brushes
Knot wheel brushes for grinders, angle grinders and stationary machines used in the preparation and reworking of bolt fillet and butt welds. They remove scale, rust, paint, slag, rubber residue and can be used for deburring.

Knot Wheel Brushes with multiple Rows
Ready mounted brushes with multiple rows have a dense filling compared to single segment brushes, which are assembled together. In your order please state the width of the brush, bore size and type and thickness of wire.

The listed knot wheel brushes are for the use in stationary machines.

Stainless Steel Brushes
LESSMANN-brushes with stainless steel have green side plates. We use wire with material number 1.4310. Material number 1.4401 can be used on request.
Information on working on stainless steel you find at www.lessmann.com

Chunky packaging
Many articles you receive as standard in handy covering boxes with 10 pcs.

All knots on our standard twisted wire wheel brushes are left hand twisted in order to minimize the undoing of the knots should the brush be used incorrectly.
On request we can supply right hand twist brushes.

In addition to brushes with left or right knotted, we also offer left-right knotted brushes.

Left-right knotted wheel brushes usually are more aggressive, hence they are often used for heavy brushing operations.
Besides the knots open less, therefore there are ideal for the treatment of edges.

User Tip:
We recommend to turn the brush during use in order to maintain sharpened wire ends.

On request other bores and wire diameter are available.

ZF = Knot type
Z = number of knots, R = number of rows

Item Nos. in bold are available ex stock.
Consider our minimum order value for *italic printed* article numbers (see page 152).

STM = brass coated steel, straight
STH = steel wire, high tensile, straight
ROH = stainless steel wire, high tensile, straight

Knot types ZF

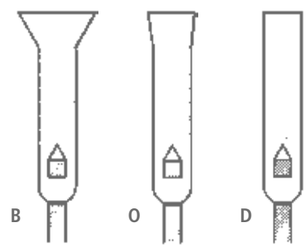

B: Rose Bud
O: Open Knot
(wire ends are cut)
D: Fully knotted
(wire ends are cut completely)

EAN **Knot Wheel Brushes, Steel Wire, Brass Wire**

D mm | *inch*	A mm | *inch*	d mm | *inch*	H	Z	ZF	R	RPM max.	Pack.	**STH 0.35** | *0.014"* Art.-No.	**STH 0.50** | *0.020"* Art.-No.	**STH 0.80** | *0.031"* Art.-No.	**STM 0,50** | *0.020"* Art.-No.	*left-right knotted* **STH 0.50** | *0.020"* Art.-No.
75 | *3*	10 | *3/8*	13 | *1/2*	15	18	B	1	25,000	1	**470.111***	**470.211***			
100 | *4*	12 | *1/2*	M 14 x 2,0	22	18	B	1	12,500	1	**471.117***	**471.217***			
115 | *4 1/2*	14 | *1/2*	22.2 | *7/8*	24	20	B	1	12,500	1	**472.111***	**472.211***		**472.211.SM***	**472.211.WZ***
115 | *4 1/2*	14 | *1/2*	M 14 x 2,0	24	20	B	1	12,500	1	**472.117***	**472.217***			
125 | *5*	14 | *1/2*	22.2 | *7/8*	29	20	B	1	12,500	1	**473.111***	**473.211***		**473.211.SM***	**473.211.WZ***
125 | *5*	14 | *1/2*	M 14 x 2,0	29	20	B	1	12,500	1	**473.117***	**473.217***			**473.217.WZ***
125 | *5*	14 | *1/2*	22.2 | *7/8*	29	24	B	1	12,500	1		**473.211.24**			
150 | *6*	14 | *1/2*	22.2 | *7/8*	32	26	B	1	12,500	1	**474.111***	**474.211***	*474.311*		
150 | *6*	14 | *1/2*	M 14 x 2,0	32	26	B	1	12,500	1	*474.117**	**474.217***	*474.317*		
178 | *7*	14 | *1/2*	22.2 | *7/8*	38	32	B	1	12,500	1	**475.111***	**475.211***	**475.311**		
178 | *7*	14 | *1/2*	M 14 x 2,0	38	32	B	1	12,500	1	*475.117**	**475.217***	*475.317*		
200 | *8*	14 | *1/2*	22.2 | *7/8*	41	36	B	1	9,000	1	**476.111**	**476.211**	**476.311**		
200 | *8*	14 | *1/2*	50.8 | *2*	41	36	B	1	9,000	1		*476.210.51*	available on demand		
230 | *9 1/16*	14 | *1/2*	22.2 | *7/8*	56	40	B	1	9,000	1		*475.211*			
250 | *10*	15 | *5/8*	50.8 | *2***	42	52	O	1	5,000	1		**477.210.75**	*477.310.75*		
300 | *12*	15 | *5/8*	50.8 | *2***	56	58	O	1	5,000	1		*478.210.75*	*478.310.75*		

EAN **Knot Wheel Brushes, Stainless Steel Wire**

D mm | *inch*	A mm | *inch*	d mm | *inch*	H	Z	ZF	R	RPM max.	Pack.	**ROH 0.35** | *0.014"* Art.-No.	**ROH 0.50** | *0.020"* Art.-No.	*left-right knotted* **ROH 0.50** | *0.020"* Art.-No.
100 | *4*	12 | *1/2*	M 14 x 2,0	22	18	B	1	12,500	1		**471.817***	
115 | *4 1/2*	14 | *1/2*	22.2 | *7/8*	24	20	B	1	12,500	1	**472.711***	**472.811***	**472.811.WZ***
115 | *4 1/2*	14 | *1/2*	M 14 x 2,0	24	20	B	1	12,500	1	**472.717***	**472.817***	
125 | *5*	14 | *1/2*	22.2 | *7/8*	29	20	B	1	12,500	1	**473.711***	**473.811***	**473.811.WZ***
125 | *5*	14 | *1/2*	M 14 x 2,0	29	20	B	1	12,500	1		**473.817***	
150 | *6*	14 | *1/2*	22.2 | *7/8*	32	26	B	1	12,500	1		**474.811***	
150 | *6*	14 | *1/2*	M 14 x 2,0	32	26	B	1	12,500	1		**474.817**	
178 | *7*	14 | *1/2*	22.2 | *7/8*	38	32	B	1	12,500	1		**475.811***	
178 | *7*	14 | *1/2*	M 14 x 2,0	38	32	B	1	12,500	1		**475.817**	

Thread 5/8" - 11 UNC on request | * packed 10 pieces per carton | ** with turtle bore

Knot Wheel Brushes, multiple rows

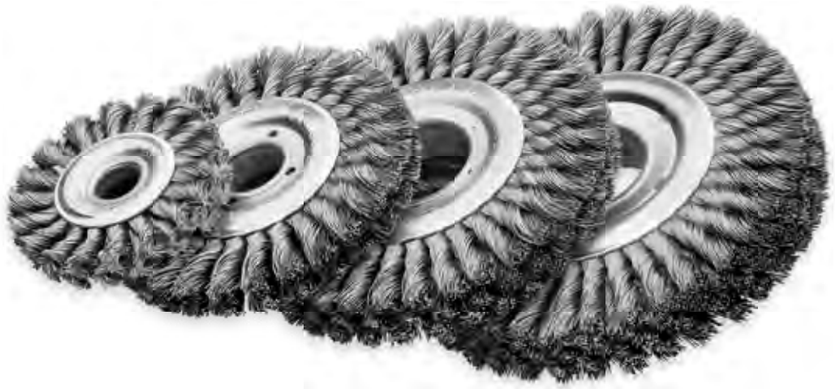

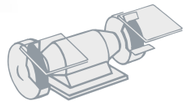

EAN

Knot Wheel Brushes, multiple rows

D mm | *inch*	A	EB	d Stand mm | *inch*	d min	H	ZF	Z x R	RPM max.	Pack.	**STH 0.35** *0.014"*	**STH 0.50** *0.020"*	**ROH 0.35** *0.014"*	**ROH 0.50** *0.020"*
100 | *4*	22-24	12	20 | *3/4*	10	21	B	20 x 2	12,500	1	*471.12K*	*471.22K*	*471.72K*	*471.82K*
100 | *4*	30-32	18	20 | *3/4*	10	21	B	20 x 3	12,500	1	*471.13K*	*471.23K*	*471.73K*	*471.83K*
100 | *4*	34-36	25	20 | *3/4*	10	21	B	20 x 4	12,500	1	*471.14K*	*471.24K*	*471.74K*	*471.84K*
115 | *4 1/2*	22-24	18	30 | *1 1/4*	10	23.5	B	22 x 2	12,500	1	*472.12K*	*472.22K*	*472.72K*	*472.82K*
115 | *4 1/2*	30-32	25	30 | *1 1/4*	10	23.5	B	22 x 3	12,500	1	*472.13K*	*472.23K*	*472.73K*	*472.83K*
115 | *4 1/2*	34-36	30	30 | *1 1/4*	10	23.5	B	22 x 4	12,500	1	*472.14K*	*472.24K*	*472.74K*	*472.84K*
125 | *5*	22-24	18	30 | *1 1/4*	13	28.5	B	24 x 2	12,500	1	*473.12K*	*473.22K*	*473.72K*	*473.82K*
125 | *5*	30-32	25	30 | *1 1/4*	13	28.5	B	24 x 3	12,500	1	*473.13K*	*473.23K*	*473.73K*	*473.83K*
125 | *5*	34-36	30	30 | *1 1/4*	13	28.5	B	24 x 4	12,500	1	*473.14K*	*473.24K*	*473.74K*	*473.84K*
150 | *6*	22-24	18	30 | *1 1/4*	13	31.5	O	28 x 2	12,500	1	*474.12K*	*474.22K*	*474.72K*	*474.82K*
150 | *6*	30-32	25	30 | *1 1/4*	13	31.5	O	28 x 3	12,500	1	*474.13K*	*474.23K*	*474.73K*	*474.83K*
150 | *6*	36-38	30	30 | *1 1/4*	13	31.5	O	28 x 4	12,500	1	*474.14K*	*474.24K*	*474.74K*	*474.84K*
178 | *7*	22-24	18	50 | *2*	16	37.5	O	34 x 2	12,500	1	*475.12K*	*475.22K*	*475.72K*	*475.82K*
178 | *7*	30-32	25	50 | *2*	16	37.5	O	34 x 3	12,500	1	*475.13K*	*475.23K*	*475.73K*	*475.83K*
178 | *7*	36-38	30	50 | *2*	16	37.5	O	34 x 4	12,500	1	*475.14K*	*475.24K*	*475.74K*	*475.84K*
200 | *8*	22-24	18	50 | *2*	16	41	O	38 x 2	9,000	1	*476.12K*	*476.22K*	*476.72K*	*476.82K*
200 | *8*	30-32	25	50 | *2*	16	41	O	38 x 3	9,000	1	*476.13K*	*476.23K*	*476.73K*	*476.83K*
200 | *8*	36-38	30	50 | *2*	16	41	O	38 x 4	9,000	1	*476.14K*	*476.24K*	*476.74K*	*476.84K*
250 | *10*	26-30	18	100 | *4*	20	42	O	52 x 2	5,000	1	*477.12K*	*477.22K*	*477.72K*	*477.82K*
250 | *10*	38-40	26	100 | *4*	20	42	O	52 x 3	5,000	1	*477.13K*	*477.23K*	*477.73K*	*477.83K*
250 | *10*	50-54	34	100 | *4*	20	42	O	52 x 4	5,000	1	*477.14K*	*477.24K*	*477.74K*	*477.84K*
300 | *12*	26-30	18	100 | *4*	30	56	O	58 x 2	5,000	1	*478.12K*	*478.22K*	*478.72K*	*478.82K*
300 | *12*	38-40	26	100 | *4*	30	56	O	58 x 3	5,000	1	*478.13K*	*478.23K*	*478.73K*	*478.83K*
300 | *12*	50-54	34	100 | *4*	30	56	O	58 x 4	5,000	1	*478.14K*	*478.24K*	*478.74K*	*478.84K*

Joint Cleaning Brushes

Joint Cleaning Brushes

D mm | *inch*	A mm | *inch*	d mm | *inch*	H	Z	ZF	R	RPM max.	Pack.	**STA 0.50** | *0.020"* Art.-No.	**STA 0.80** | *0.031"* Art.-No.	**STM 0.50** | *0.020"* Art.-No.
300 | *12*	6 | *1/4*	20 | *3/4*	67	64	D	1	5,000	5	**478.200.06**	*478.300.06*	*478.500.06*
300 | *12*	8 | *5/16*	20 | *3/4*	67	64	D	1	5,000	5	**478.200.08**	**478.300.08**	*478.500.08*
300 | *12*	10 | *3/8*	20 | *3/4*	67	64	D	1	5,000	5	**478.200.10**	*478.300.10*	
300 | *12*	6 | *1/4*	25.4 | *1*	67	64	D	1	5,000	5	*478.225.06*	*478.325.06*	
300 | *12*	8 | *5/16*	25.4 | *1*	67	64	D	1	5,000	5	*478.225.08*	*478.325.08*	
300 | *12*	10 | *3/8*	25.4 | *1*	67	64	D	1	5,000	5	*478.225.10*	*478.325.10*	

Knot Wheel Brushes, multiple rows

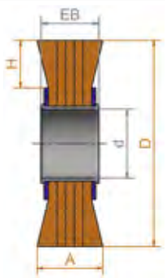

ZF = Knot type
Z = number of knots, R = number of rows

Joint Cleaning Brushes
Joint cleaning brushes are used for the production of expansion joints in the construction of new linings as well as in restoration and reparation. The application of this knot wheel brush is usually alike with all pavements.

Brushes with brass coated steel wire STM are very stable, hence they are often used for cleaning concrete joints.

ZF = Knot type
Z = number of knots, R = number of rows

Item Nos. in bold are available ex stock.
Consider our minimum order value for *italic printed* article numbers (see page 152).

STA = steel wire, straight
STH = steel wire, high tensile, straight
STM = brass coated steel, straight
ROH = stainless steel wire, high tensile, straight

Pipeline Brushes / Stringer Bead Brushes

Pipeline-Brushes / Stringer Bead Brushes
LESSMANN-Pipelinebrushes are specially developed for professional use on U- and V-welds in the pipeline industry.

The remarkable features of the high quality LESSMANN Pipeline Brushes are the long lifetime and the quietness of running. They are especially narrow and therefore they are the perfect tool for cleaning all welds at tube connections.

Pipeline Brushes / Stringer Bead Brushes, left-right knotted
Left-right knotted pipeline brushes usually are more aggressive, hence they are often used for heavy brushing operations.
Besides the knots open less, therefore there are ideal for the treatment of edges.

Stainless Steel Brushes
LESSMANN Pipeline Brushes with stainless steel wire have green side plates. We use wire with material number 1.4310. Material number 1.4401 can be used on request.
Information on working on stainless steel you find at www.lessmann.com

ZF = Knot type
Z = number of knots

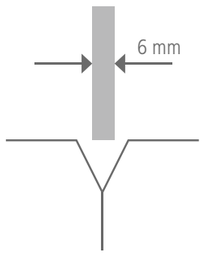

Item Nos. in bold are available ex stock.
Consider our minimum order value for *italic printed* article numbers (see page 152).

STH = steel wire, high tensile, straight

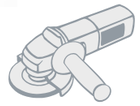

Pipeline-Brushes / Stringer Bead Brushes, Steel Wire							Bo. 22.2 | *7/8"*	M 14 x 2.0	5/8" - 11 UNC
D	A	H	Z	ZF	RPM	Pack.*	**STH 0.50** | *0.020"*	**STH 0.50** | *0.020"*	**STH 0.50** | *0.020"*
mm | *inch*	mm | *inch*				max.		Art.-No.	Art.-No.	Art.-No.
100 | *4*	6 | *1/4*	19	28	D	20,000	10	available on demand	**471.207.28**	*471.208.28*
115 | *4 1/2*	6 | *1/4*	22	32	D	15,000	1	**472.201.EZ**		
115 | *4 1/2*	6 | *1/4*	22	32	D	15,000	5/10	**472.201.32**	*472.207.32*	*472.208.32*
115 | *4 1/2*	6 | *1/4*	22	39	D	15,000	10	**472.201.39**	available on demand	available on demand
125 | *5*	6 | *1/4*	26	40	D	15,000	1	**473.201.EZ**		
125 | *5*	6 | *1/4*	26	40	D	15,000	5/10	**473.201.40**	**473.207.40**	*473.208.40*
150 | *6*	6 | *1/4*	30	48	D	12,500	5/10	**474.201.48**	*474.207.48*	*474.208.48*
178 | *7*	6 | *1/4*	36	48	D	12,500	1	**475.201.EZ**		
178 | *7*	6 | *1/4*	36	48	D	12,500	5/10	**475.201.48**	*475.207.48*	*475.208.48*
178 | *7*	6 | *1/4*	30	56	D	12,500	5/10	**475.201.56**	*475.207.56*	*475.208.56*
178 | *7*	6 | *1/4*	30	76	D	12,500	5/10	**475.201.76**	*475.207.76*	*475.208.76*
230 | *9 1/16*	6 | *1/4*	56	76	D	12,500	1	*475.201.76*		

* Brushes with thread = packed 5 pieces per carton, brushes with bore = packed 10 pieces per carton

Pipeline Brushes / Stringer Bead Brushes

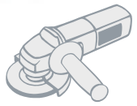

Pipeline-Brushes / Stringer Bead Brushes, Stainless Steel							Bo. 22.2 | *7/8"*	M 14 x 2.0	5/8" - 11 UNC
D mm | *inch*	A mm | *inch*	H	Z	ZF	RPM max.	Pack.*	**ROH 0.50** | *0.020"* Art.-No.	**ROH 0.50** | *0.020"* Art.-No.	**ROH 0.50** | *0.020"* Art.-No.
100 | *2*	6 | *1/4*	19	28	D	20,000	10	available on demand	**471.807.28**	*471.808.28*
115 | *4 1/2*	6 | *1/4*	22	32	D	15,000	1	**472.801.EZ**		
115 | *4 1/2*	6 | *1/4*	22	32	D	15,000	5/10*	**472.801.32**	*472.807.32*	*472.808.32*
115 | *4 1/2*	6 | *1/4*	22	39	D	15,000	10	**472.801.39**	available on demand	available on demand
125 | *5*	6 | *1/4*	26	40	D	15,000	1	**473.801.EZ**		
125 | *5*	6 | *1/4*	26	40	D	15,000	5/10*	**473.801.40**	**473.807.40**	*473.808.40*
150 | *6*	6 | *1/4*	30	48	D	12,500	5/10*	**474.801.48**	*474.807.48*	*474.808.48*
178 | *7*	6 | *1/4*	36	48	D	12,500	5/10*	**475.801.48**	*475.807.48*	*475.808.48*
178 | *7*	6 | *1/4*	30	56	D	12,500	5/10*	*475.801.56*	*475.807.56*	*475.808.56*
178 | *7*	6 | *1/4*	30	76	D	12,500	5/10*	*475.801.76*	*475.807.76*	*475.808.76*

* Brushes with thread = packed 5 pieces per carton, brushes with bore = packed 10 pieces per carton

1 2 3

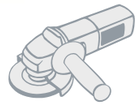

1 Pipeline-Brushes / Stringer Bead Brushes, rose bud								
D mm | *inch*	A mm | *inch*	d mm | *inch*	H	Z	ZF	RPM max.	Pack.	**STH 0.50** | *0.020"* Art.-No.
178 | *7*	6 | *1/4*	22.2 | *7/8*	28	76	B	12,500	10	**475.2B1.76**

2 Pipeline-Brushes / Stringer Bead Brushes, left-right knotted								
D mm | *inch*	A mm | *inch*	d mm | *inch*	H	Z	ZF	RPM max.	Pack.	**STH 0.50** | *0.020"* Art.-No.
178 | *7*	6 | *1/4*	22.2 | *7/8*	28	76	D	12,500	10	*475.2W1.76*

3 Pipeline-Brushes / Stringer Bead Brushes, encapsulated								
D mm | *inch*	A mm | *inch*	d mm | *inch*	H			RPM max.	Pack.	**STM 0.35** | *0.014"* Art.-No.
150 | *6*	6 | *1/4*	22.2 | *7/8*	29			9,000	1	*300.771.KG*
178 | *7*	6 | *1/4*	22.2 | *7/8*	43			9,000	1	*351.771.KG*

Pipeline Brushes / Stringer Bead Brushes with rose bud
Knotted brushes with rose bud have a longer life time. They are used for a professional treatment of weld seams in the tube and pipeline construction.

Pipeline Brushes / Stringer Bead Brushes, left-right knotted
Left-right knotted pipeline brushes usually are more aggressive, hence they are often used for heavy brushing operations.
Besides the knots open less, therefore they are ideal for the treatment of edges.

Pipeline Brushes / Stringer Bead Brushes, encapsulated
With encapsulated pipeline brushes a very exact and precise working is possible. By embedding in tough plastic the filling width always remains the same and early break of the wires can be prevented.
A working width of 6 mm still allows to reach U- and V- weld seams.

Item Nos. in bold are available ex stock.
Consider our minimum order value for *italic printed* article numbers (see page 152).

STH = steel wire, high tensile, straight
STM = brass coated steel, crimped
ROH = stainless steel wire, high tensile, straight

ZF = Knot type
Z = number of knots

Cutback Brushes

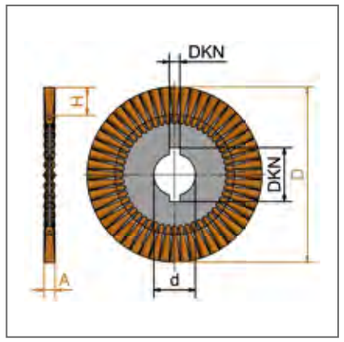

Cutback Brushes
for the removal of pipe coatings.

The removal of pipe-ends with brushes is a common process in the pipe industry.

To prevent corrosion, steel pipes are usually covered in epoxy resin and several layers of polyethylene (PE) or polypropylene (PE). To ensure a strong and safe welded joint during the installation of the pipes, the coating has to be removed completely on the ends of the pipes. For this process, usually several rings of knotted wire brushes are mounted together to get one large block of wheel brushes.

The LESSMANN Cutback Brushes are proven to have a long lifetime and are used by many international companies producing pipe for the oil and gas industry.

LESSMANN Cutback rings **are supplied already mounted to one another**. This ensures a perfect balancing, an even surface and a tighter fitting.

All Cutback Brushes can be purchased with left-right knotting (WZ), too.

Cutback Brushes, left-right knotted
Left-right knotted cutback brushes usually are more aggressive, hence they are often used for heavy brushing operations.
The knots of this type of brush open less, therefore there are ideal for the treatment of edges.

Item Nos. in bold are available ex stock.
Consider our minimum order value for *italic printed* article numbers (see page 152).

STH = steel wire, high tensile, straight
ROH = stainless steel wire, high tensile, straight

Knot types ZF

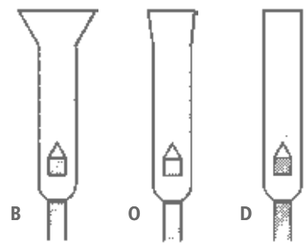

B: Rose Bud
O: Open Knot
(wire ends are cut)
D: Fully knotted
(wire ends are cut completely)

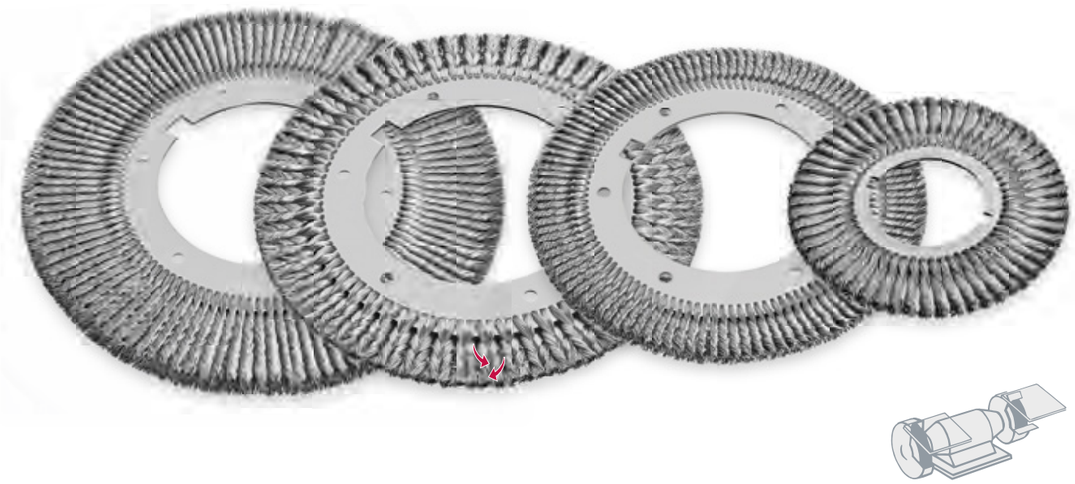

Cutback Brushes

D	A	H	d	Keyways	Z	ZF		STH	ROH
250	13	45	102	115,8 x 13	56	O		0,63	0,50 / 0,80
300	13	60	102	115,8 x 13	64	O		0,80	0,50 / 0,80
390	13	45	200,6	233 x 24	114	O	right-left knotted (WZ)	0,63 / 0,80	0,80
465	13	82,5	200,6	233 x 24	114	O		0,58 / 0,80	0,80

The table above gives you an insight into the range of brushes LESSMANN can produce.
Due to modern technologies in production we can respond to individual requests and wishes of our customers (diameter, working width, bore).

If requested, scribe markings are possible.

Please follow the QR-Code or fill in the form below:

Enquiry for Cutback Brushes

sender: company, contact person

Please fill in

Piece number: _____
D diameter _____ mm
A working width _____ mm
H trim height _____ mm
d bore _____ mm
Keyways _____ mm
Z number of knots _____
ZF knot type _____
filling material _____
wire diameter _____ mm

Inquiries and Infos:
Phone: +49 9082 707-0 info@lessmann.com
Fax: +49 9082 707-76 www.lessmann.com

Single Segment Brushes

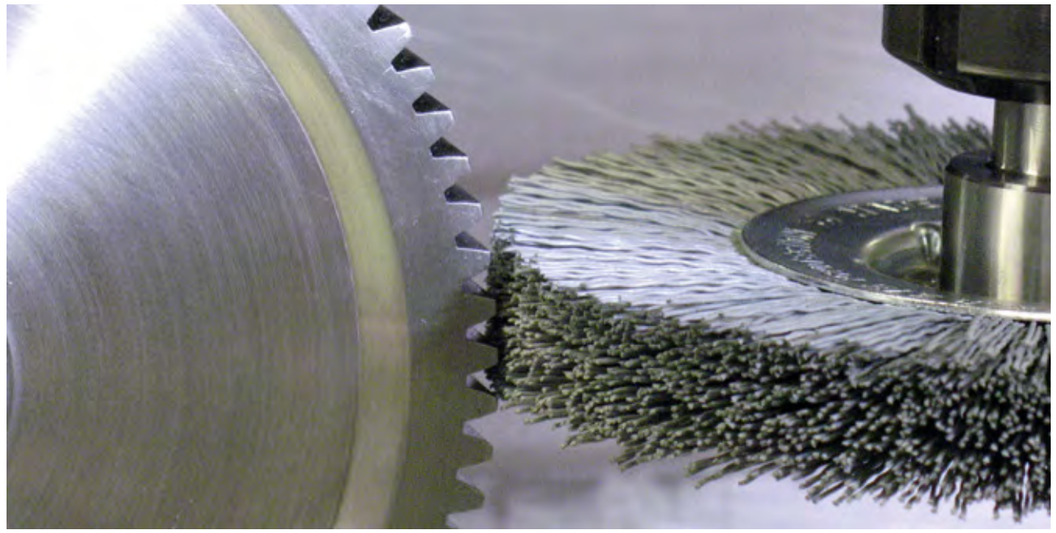

Single Segment Brushes
These brushes are mainly used for deburring purposes in stationary machines or processing centres.
The construction of these brushes allows it to assemble them to roller brushes of any desired width. Many different filling materials like steel, stainless steel or abrasive nylon with various grit are at your disposal.

Outstanding Processing
The flexible bristles align to the different shapes of working pieces.
An important advantage of the single segment brushes compared to other grinding tools, such as pads or grinding discs, is their gentle treatment.
Furthermore the brushes do not become encrusted. They are suitable for deburring work and fine polishing of stainless steel, light metal or plastic material. Besides the executions listed on this page other diameters and grit sizes are available.

Stainless Steel Brushes
LESSMANN-brushes with stainless steel wire have a laser imprint.
Information on working on stainless steel you find at www.lessmann.com

Laser imprint of brushes

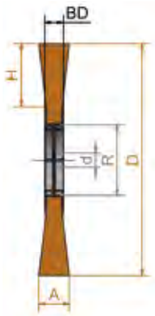

„A" can be up to 4 mm larger than **„BD"**
EB 3,0 mm with R > 60
EB 2,4 mm with R ≤ 60

For further information on abrasive filaments please see page 13.
Item Nos. in bold are available ex stock.
Consider our minimum order value for *italic printed* article numbers (see page 152).

SIC = silicon carbide bristles

1

2

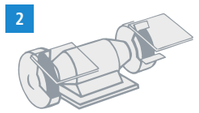

1 Single Segment Wheel Brushes, Silicon Carbide Bristles

D mm | *inch*	R	BD	H	d Stand. mm | *inch*	d min./max.	RPM max.	Pack.	SIC 80/1.2 Art.-No.	SIC 120/1.1 Art.-No.	SIC 120/0.6 Art.-No.	SIC 180/1.0 Art.-No.	SIC 320/0.6 Art.-No.
80 | *3 1/4*	26	12	17	12 | *1/2*	12-16	12,000	5		*310.831*	**310.841**	**310.851**	**310.871**
100 | *2*	30	12	21	12 | *1/2*	12-20	8,000	5	**320.821**	*320.831*	**320.841**	**320.851**	**320.871**
125 | *5*	30	12	33	12 | *1/2*	12-20	8,000	5	*330.821*		**330.841**	**330.851**	*330.871*
150 | *6*	50	14	32	12 | *1/2*	12-30	6,000	5	**340.821**	**340.831**	**340.841**	**340.851**	**340.871**
178 | *7*	50	14	46	12 | *1/2*	12-30	6,000	5	*350.821*	**350.831**	**350.841**	*350.851*	*350.871*
178 | *7*	60	16	43	12 | *1/2*	12-40	6,000	5			*351.841*	*351.851*	*351.871*
200 | *8*	60	16	54	12 | *1/2*	12-40	6,000	5	*361.821*	*361.831*	*361.841*	*361.851*	*361.871*
200 | *8*	80	16	43	16 | *5/8*	16-60	6,000	5		*362.831*	*362.841*	**362.851**	*362.871*
200 | *8*	100	16	32	16 | *5/8*	16-80	6,000	5		**360.831**	**360.841**	**360.851**	**360.871**
250 | *10*	100	16	57	16 | *5/8*	16-80	6,000	5		**370.831**	*370.841*	**370.851**	**370.871**
250 | *10*	120	16	45	20 | *3/4*	20-100	3,600	5			*371.841*	*371.851*	*371.871*
250 | *10*	150	19	30	25.4 | *1*	25-130	3,600	5		*372.831*	*372.841*	**372.851**	*372.871*
300 | *12*	120	16	70	20 | *3/4*	20-100	3,600	5			*380.841*	*380.851*	*380.871*
300 | *12*	150	19	35	25.4 | *1*	25-130	3,600	5		*381.831*	*381.841*	*381.851*	*381.871*
300 | *12*	200	19	30	*25.4* | *1*	25.4-170	2,600	5			*38T.841*	*38T.851*	

2 Single Segment Wheel Brushes, Silicon Carbide Bristles, 2 rows

D mm | *inch*	R	BD	H	d Stand. mm | *inch*	d min./max.	RPM max.	Pack.	SIC 120/0.6 Art.-No.	SIC 180/1.0 Art.-No.	SIC 320/0.6 Art.-No.
200 | *8*	80	27	43	16 | *5/8*	16-60	6,000	5	available on demand	*362.852*	available on demand
250 | *10*	100	27	58	16 | *5/8*	16-80	6,000	5	available on demand	*370.852*	available on demand

Bore must be indicated in the order. Standard bore delivery ex stock, short termed. Other bores are available with extra charge: 1 - 10 pcs. EUR 5,50 / 11 - 25 pcs. EUR 3,50

Single Segment Wheel Brushes

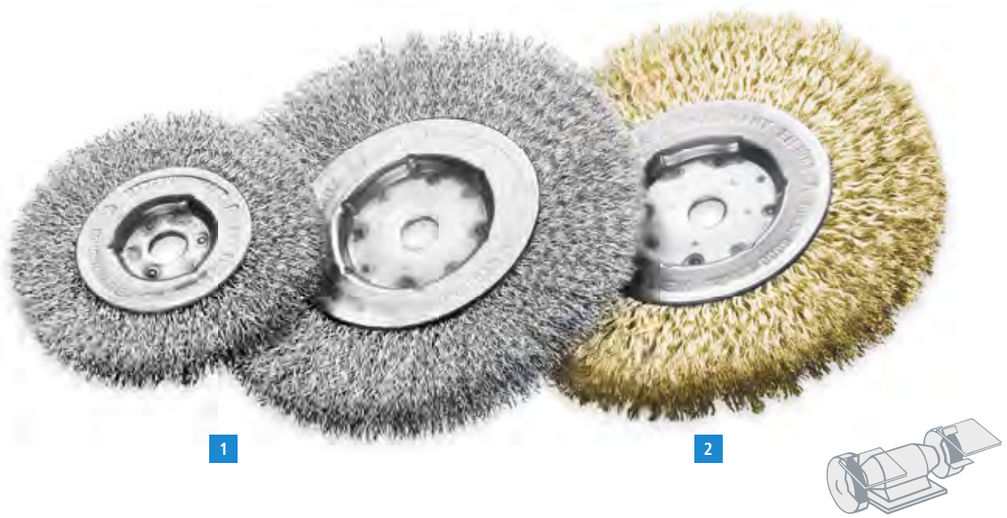

Single Segment Wheel Brushes, Steel Wire

D mm | *inch*	R	BD	H	d Stand. mm | *inch*	d min./max.	RPM max.	Pack.	1 STA 0.20 | *0.008"* Art.-No.	1 STA 0.30 | *0.012"* Art.-No.	2 STL 0.35 | *0.014"* Art.-No.
80 | *3 1/4*	26	12	17	12 | *1/2*	12-16	12,000	5	**310.141**	**310.161**	available on demand
100 | *4*	30	12	21	12 | *1/2*	12-20	8,000	5	**320.141**	**320.161**	*320.707*
125 | *5*	30	12	33	12 | *1/2*	12-20	8,000	5	*330.141*	**330.161**	available on demand
125 | *5*	40	12	29	12 | *1/2*	12-25	8,000	5	available on demand	*331.161*	available on demand
150 | *6*	50	14	32	12 | *1/2*	12-30	6,000	5	**340.141**	**340.161**	*340.707*
178 | *7*	50	14	46	12 | *1/2*	12-30	6,000	5	*350.141*	**350.161**	available on demand
178 | *7*	60	16	43	12 | *1/2*	12-40	6,000	5	*351.141*	*351.161*	*351.707*
200 | *8*	60	16	54	12 | *1/2*	12-40	6,000	5	*361.141*	*361.161*	available on demand
200 | *8*	80	16	43	16 | *5/8*	16-60	6,000	5	*362.141*	*362.161*	*362.707*
200 | *8*	100	16	32	16 | *5/8*	16-80	6,000	5	**360.141**	**360.161**	*360.707*
250 | *10*	100	16	57	16 | *5/8*	16-80	6,000	5	*370.141*	**370.161**	available on demand
250 | *10*	120	16	45	20 | *3/4*	20-100	3,600	5	*371.141*	*371.161*	available on demand
300 | *12*	120	16	70	20 | *3/4*	20-100	3,600	5	*380.141*	*380.161*	available on demand
300 | *12*	150	19	55	25.4 | *1*	25.4-130	3,600	5		*381.161*	

Single Segment Wheel Brushes, Steel Wire, 2 rows

D mm | *inch*	R	BD	H	d Stand. mm | *inch*	d min./max.	RPM max.	Pack.	STH 0.35 | *0.014"* Art.-No.
200 | *8*	80	20	43	16 | *5/8*	16-60	6,000	5	*362.272*
250 | *10*	100	20	58	16 | *5/8*	16-80	6,000	5	*370.272*

Bore must be indicated in the order. Standard bore delivery ex stock, short termed. Other bores are available with extra charge: 1 - 10 pcs. EUR 5,50 / 11 - 25 pcs. EUR 3,50

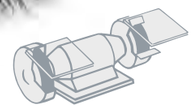

Single Segment Wheel Brushes, Stainless Steel Wire

D mm | *inch*	R	BD	H	d Stand. mm | *inch*	d min./max.	RPM max.	Pack.	ROF 0.20 | *0.008"* Art.-No.	ROF 0.30 | *0.012"* Art.-No.
80 | *3 1/4*	26	12	17	12 | *1/2*	12-16	12,000	5	*310.341*	*310.361*
100 | *2*	30	12	21	12 | *1/2*	12-20	8,000	5	**320.341**	**320.361**
125 | *5*	30	12	33	12 | *1/2*	12-20	8,000	5	**330.341**	**330.361**
125 | *5*	40	12	29	12 | *1/2*	12-25	8,000	5	*331.341*	*331.361*
150 | *6*	50	14	32	12 | *1/2*	12-30	6,000	5	**340.341**	**340.361**
178 | *7*	50	14	46	12 | *1/2*	12-30	6,000	5	*350.341*	**350.361**
178 | *7*	60	16	43	12 | *1/2*	12-40	6,000	5	*351.341*	*351.361*
200 | *8*	60	16	54	12 | *1/2*	12-40	6,000	5	*361.341*	*361.361*
200 | *8*	80	16	43	16 | *5/8*	16-60	6,000	5	*362.341*	*362.361*
200 | *8*	100	16	32	16 | *5/8*	16-80	6,000	5	*360.341*	**360.361**
250 | *10*	100	16	57	16 | *5/8*	16-80	6,000	5	*370.341*	*370.361*
250 | *10*	120	16	45	20 | *3/4*	20-100	6,000	5	*371.341*	*371.361*
300 | *12*	120	16	70	20 | *3/4*	20-100	3,600	5	*380.341*	*380.361*
300 | *12*	150	19	55	25.4 | *1*	25.4-130	3,600	5		*381.361*

Bore must be indicated in the order. Standard bore delivery ex stock, short termed. Other bores are available with extra charge: 1 - 10 pcs. EUR 5,50 / 11 - 25 pcs. EUR 3,50

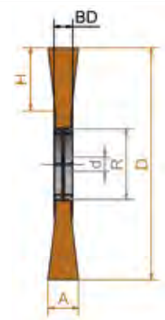

„A" can be up to 4 mm larger than **„BD"**
EB 3,0 mm with R > 60
EB 2,4 mm with R ≤ 60

For further information on abrasive filaments please see page 13.
Item Nos. in bold are available ex stock.
Consider our minimum order value for *italic printed* article numbers (see page 152).

STA = steel wire, crimped
STH = steel wire, high tensile, crimped
STL = cord wire, crimped
ROF = stainless steel wire, crimped

Wheel Brushes

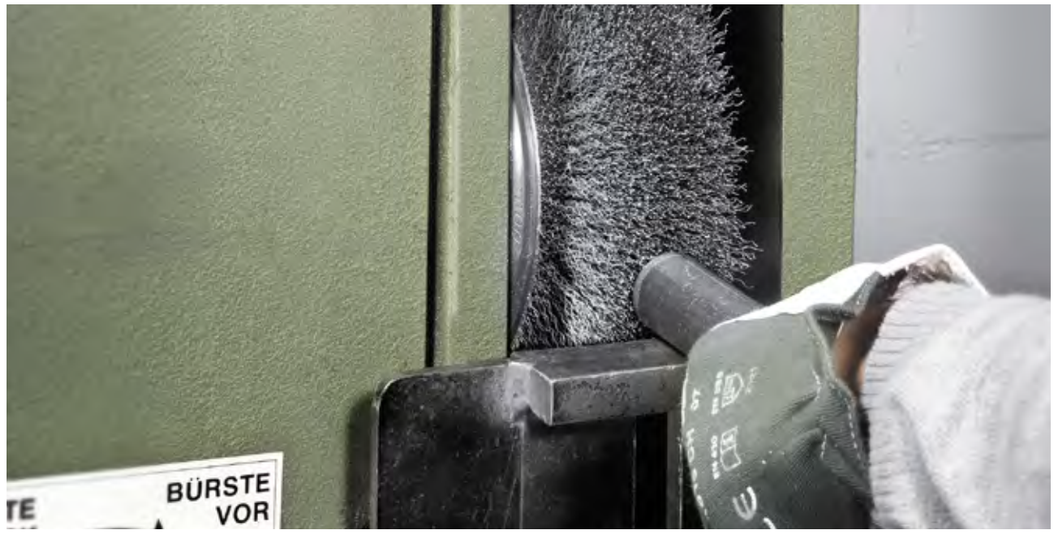

Wheel Brushes
Wheel brushes filled with crimped wire are used for the purpose of obtaining different surface finishing:
- the removal of rust, paint and dirt
- for roughening, deburring, stripping or polishing.

Big or Small?
A decisive factor for choosing the most suitable brush is the wire and tube diameter. Brushes with a larger tube diameter (measure R) are filled with more wire, are more aggressive and have a longer life.
In our catalogue are the usual tube diameters – other diameters can also be supplied.
More technical instruction such as peripheral speed etc. see pages 8 - 10.

The bore must be indicated in the order. Without any instruction delivery will be with standard bore "d Stand".

Stainless Steel Brushes
Information on working on stainless steel you find at www.lessmann.com

Other filling materials, filling diameters and special executions
Take advantage of the LESSMANN range of products, of the experience in developing and producing brushes! We are able to produce special executions on demand.

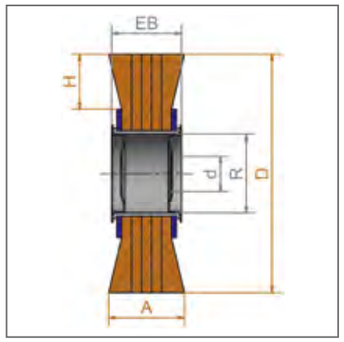

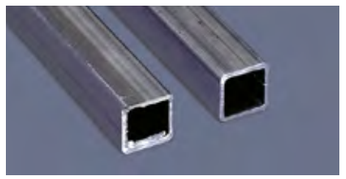

Plate with tube 80 and 100 (Set 4 / 5)

Item Nos. in bold are available ex stock.
Consider our minimum order value for *italic printed* article numbers (see page 152).

STA = steel wire, crimped
STM = brass coated steel, crimped

Adapter Set
All brushes are supplied with adapter sets for easy mounting on all popular grinding machines. The adapters have the following dimensions:

Set 1 / tube 30:
30 / 1" / 22,2 / 20 / 16 / 1/2" / 12
Set 2 / tube 40:
40 / 32 / 1" / 22.2 / 20 / 16 / 1/2"
Set 3 / tube 50:
50 / 32 / 1" / 22.2 / 20 / 16 / 1/2"
Set 4 / tube 80 + 100:
brushes with metal discs, bore 50.8 and double keyway 7x13; plus adapter to bore 30.
Set 5 / tube 80 + 100:
brushes with metal discs, bore 50.8 and double keyway 7x13; plus adapter to bore 32.

By usage without adapter set the actual size might be up to 0.2 mm below nominal size.

EAN

Wheel Brushes, Steel Wire

D mm | *inch*	A	EB	R	H	d Stand. mm | *inch*	d min./max.	RPM max.	Pack.	1 STA 0.15 | *0.006"* Art.-No.	1 STA 0.20 | *0.008"* Art.-No.	1 STA 0.30 / *0.35 *0.012" / 0.014"*	2 STM 0.30 | *0.012"* Art.-No.
80 | *3 1/4*	18-20	18	20	20	10 | *3/8*	10-20	10,000	1	available on demand	**312.142**	**312.162**	
80 | *3 1/4*	25-27	24	20	20	10 | *3/8*	10-20	10,000	1	available on demand	*312.143*	**312.163**	
100 | *4*	20-22	19	30	23	Set 1	10-30	8,000	1	*323.132*	**323.142**	**323.162**	
100 | *4*	28-30	25	30	23	Set 1	10-30	8,000	1	*323.133*	**323.143**	**323.163**	
125 | *5*	21-23	20	40	27	Set 2	13-40	6,000	1	*334.132*	**334.142**	**334.162**	
125 | *5*	29-31	26	40	27	Set 2	13-40	6,000	1	available on demand	*334.143*	**334.163**	
150 | *6*	22-24	20	40	33	Set 2	13-40	6,000	1	*344.132*	**344.142**	**344.172***	
150 | *6*	30-34	26	40	33	Set 2	13-40	6,000	1	*344.133*	**344.143**	**344.173***	
150 | *6*	23-25	22	50	33	Set 3	13-50	6,000	1	*345.132*	**345.142**	**345.162**	*345.762*
150 | *6*	30-34	30	50	33	Set 3	13-50	6,000	1	*345.133*	**345.143**	**345.163**	
178 | *7*	23-26	22	50	37	Set 3	16-50	6,000	1	available on demand	**355.142**	**355.162**	*355.762*
178 | *7*	32-35	30	50	37	Set 3	16-50	6,000	1	*355.133*	**355.143**	**355.163**	
200 | *8*	24-27	22	50	48	Set 3	16-50	6,000	1	*365.132*	**365.142**	**365.172***	
200 | *8*	35-38	30	50	48	Set 3	16-50	6,000	1	*365.133*	**365.143**	**365.173***	*365.763*
200 | *8*	28-32	29	80	38	Set 4+1	16-80	4,500	1	available on demand	**366.142**	**366.162**	*366.762*
200 | *8*	40-45	39	80	38	Set 4+1	16-80	4,500	1	available on demand	*366.143*	**366.163**	
250 | *10*	30-35	29	80	50	Set 4+1	20-80	3,600	1	available on demand	**376.142**	**376.162**	
250 | *10*	42-45	39	80	50	Set 4+1	20-80	3,600	1	available on demand	available on demand	**376.163**	
250 | *10*	32-37	30	100	50	Set 4+1	20-100	3,600	1	available on demand	**377.142**	**377.162**	*377.762*
250 | *10*	43-48	39	100	50	Set 4+1	20-100	3,600	1	available on demand	*377.143*	**377.163**	
250 | *10*	55-60	49	100	50	Set 4+1	20-100	3,600	1	available on demand	*377.144*	**377.164**	
300 | *12*	30-35	34	120	50	Set 4	32-100	3,000	1			**388.172***	
300 | *12*	35-40	30	100	60	Set 4	30-100	3,000	1	available on demand	**387.142**	**387.162**	
300 | *12*	42-47	46	120	50	Set 4	32-100	3,000	1			**388.173***	
300 | *12*	47-52	39	100	60	Set 4	30-100	3,000	1	available on demand	*387.143*	**387.163**	
350 | *14*	35-40	30	100	85	Set 5	32-100	2,400	1	available on demand	*397.142*	**397.172***	
350 | *14*	55-60	39	100	85	Set 5	32-100	2,400	1	available on demand	*397.143*	**397.173***	

Bore must be indicated in the order. Standard bore delivery ex stock, short termed. Other bores are available with extra charge: 1 - 10 pcs. EUR 5,50 / 11 - 25 pcs. EUR 3,50

EAN **Wheel Brushes, Stainless Steel**

D mm | *inch*	A	EB	R	H	d Stand. mm | *inch*	d min./max.	RPM max.	Pack.	**ROF 0.20** | *0.008"* Art.-No.	**ROF 0.30** | *0.012"* Art.-No.
80 | *3 1/4*	18-20	18	20	20	10 | *3/8*	10-20	10,000	1	*312.342*	**312.362**
80 | *3 1/4*	25-27	24	20	20	10 | *3/8*	10-20	10,000	1	available on demand	*312.363*
100 | *4*	20-22	19	30	23	Set 1	10-30	8,000	1	*323.342*	**323.362**
100 | *4*	28-30	25	30	23	Set 1	10-30	8,000	1	*323.343*	**323.363**
125 | *5*	21-23	20	40	27	Set 2	13-40	6,000	1	*334.342*	**334.362**
125 | *5*	29-31	26	40	27	Set 2	13-40	6,000	1	*334.343*	**334.363**
150 | *6*	22-24	20	40	33	Set 2	13-40	6,000	1	*344.342*	**344.362**
150 | *6*	30-34	26	40	33	Set 2	13-40	6,000	1	**344.343**	**344.363**
150 | *6*	23-25	22	50	33	Set 3	13-50	6,000	1	*345.342*	**345.362**
150 | *6*	30-34	30	50	33	Set 3	13-50	6,000	1	*345.343*	**345.363**
178 | *7*	23-26	22	50	37	Set 3	16-50	6,000	1	**355.342**	**355.362**
178 | *7*	32-35	30	50	37	Set 3	16-50	6,000	1	available on demand	**355.363**
200 | *8*	24-27	22	50	48	Set 3	16-50	6,000	1	**365.342**	**365.362**
200 | *8*	35-38	30	50	48	Set 3	16-50	6,000	1	*365.343*	**365.363**
200 | *8*	28-32	29	80	38	Set 4+1	16-80	4,500	1	*366.342*	**366.362**
200 | *8*	40-45	39	80	38	Set 4+1	16-80	4,500	1	*366.343*	**366.363**
250 | *10*	30-35	29	80	50	Set 4+1	20-80	3,600	1	*376.342*	**376.362**
250 | *10*	42-45	39	80	50	Set 4+1	20-80	3,600	1	*376.343*	**376.363**
250 | *10*	32-37	30	100	50	Set 4+1	20-100	3,600	1	*377.342*	**377.362**
250 | *10*	43-48	39	100	50	Set 4+1	20-100	3,600	1	*377.343*	**377.363**
300 | *12*	35-40	30	100	60	Set 4	30-100	3,000	1	*387.342*	**387.362**
300 | *12*	47-52	39	100	60	Set 4	30-100	3,000	1	*387.343*	*387.363*
350 | *14*	35-40	30	100	85	Set 5	32-100	2,400	1	available on demand	*397.362*

Bore must be indicated in the order. Standard bore delivery ex stock, short termed. Other bores are available with extra charge: 1 - 10 pcs. EUR 5,50 / 11 - 25 pcs. EUR 3,50

Plate with tube 80 and 100 (Set 4 / 5)

EAN **Wheel Brushes, Brass Wire**

D mm | *inch*	A	EB	R	H	d Stand. mm | *inch*	d min./max.	RPM max.	Pack.	**MES 0.20** | *0.008"* Art.-No.	**MES 0.30** | *0.012"* Art.-No.
80 | *3 1/4*	18-20	18	20	20	10 | *3/8*	10-20	10,000	1	**312.542**	*312.562*
80 | *3 1/4*	25-27	24	20	20	10 | *3/8*	10-20	10,000	1	*312.543*	*312.563*
100 | *4*	20-22	19	30	23	Set 1	10-30	8,000	1	**323.542**	*323.562*
100 | *4*	28-30	25	30	23	Set 1	10-30	8,000	1	*323.543*	*323.563*
125 | *5*	21-23	20	40	27	Set 2	13-40	6,000	1	**334.542**	*334.562*
125 | *5*	29-31	26	40	27	Set 2	13-40	6,000	1	*334.543*	available on demand
150 | *6*	22-24	20	40	33	Set 2	13-40	6,000	1	**344.542**	**344.562**
150 | *6*	30-32	26	40	33	Set 2	13-40	6,000	1	*344.543*	**344.563**
150 | *6*	23-25	22	50	33	Set 3	13-50	6,000	1	**345.542**	**345.562**
150 | *6*	30-34	30	50	33	Set 3	13-50	6,000	1	*345.543*	**345.563**
178 | *7*	23-26	22	50	37	Set 3	16-50	6,000	1	*355.542*	**355.562**
178 | *7*	32-35	30	50	37	Set 3	16-50	6,000	1	*355.543*	**355.563**
200 | *8*	24-27	22	50	48	Set 3	16-50	6,000	1	**365.542**	**365.562**
200 | *8*	35-38	30	50	48	Set 3	16-50	6,000	1	*365.543*	**365.563**
200 | *8*	28-32	29	80	38	Set 4+1	16-80	4,500	1	**366.542**	**366.562**
200 | *8*	40-45	39	80	38	Set 4+1	16-80	4,500	1	*366.543*	*366.563*
250 | *10*	30-35	29	80	50	Set 4+1	20-80	3,600	1	*376.542*	*376.562*
250 | *10*	42-45	39	80	50	Set 4+1	20-80	3,600	1	*376.543*	available on demand
250 | *10*	32-37	30	100	50	Set 4+1	20-100	3,600	1	available on demand	**377.562**
250 | *10*	43-48	39	100	50	Set 4+1	20-100	3,600	1	available on demand	available on demand
300 | *12*	35-40	30	100	60	Set 4	30-100	3,000	1	available on demand	**387.562**
300 | *12*	47-52	39	100	60	Set 4	30-100	3,000	1	available on demand	available on demand
350 | *14*	35-40	30	100	85	Set 5	32-100	2,400	1	available on demand	*397.562*

Bore must be indicated in the order. Standard bore delivery ex stock, short termed. Other bores are available with extra charge: 1 - 10 pcs. EUR 5,50 / 11 - 25 pcs. EUR 3,50

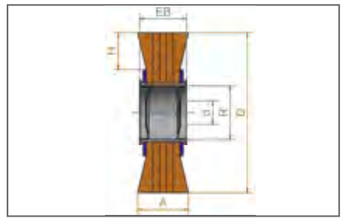

Item Nos. in bold are available ex stock.
Consider our minimum order value for *italic printed* article numbers (see page 152).

ROF = stainless steel wire, crimped

MES = brass wire, crimped

Brushes for the wood machining industry

Satin Brushes
Satin brushes are the perfect tool for satining, polishing, abrading/smoothing, matting and structuring.

Staple Set Wheel and Disc Brushes
Wheel and Disc Brushes with abrasive nylon filament are used fort he wood machining industry. Used on angle grinders, the disc brushes are ideal for maintaining, cleaning, strucutring or polishing wood.
Besides the brushes are used for giving wood a rustic effect or for roughening it before treating with colour or lacquer.
The brushes are very effective when working on large surfaces.

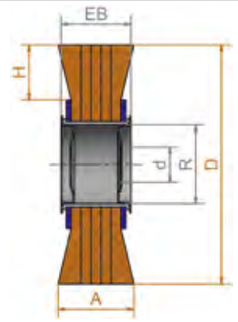

Satin Brushes

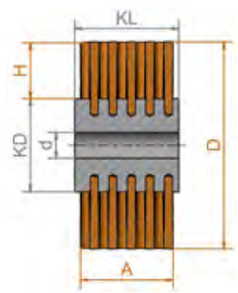

Wheel Brushes

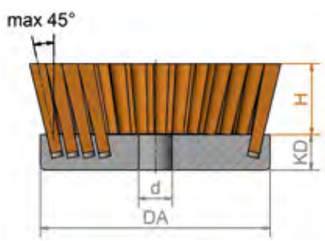

Disc Brushes

Item Nos. in bold are available ex stock.
Consider our minimum order value for *italic printed* article numbers (see page 152).

STM	= brass coated steel, crimped
STL	= cord wire, crimped
ROF	= stainless steel wire, crimped
SIC	= silicon carbide bristles
FIB	= fibre
PA	= polyamide, crimped

EAN

Satin Brushes

	D mm | *inch*	A mm | *inch*	H	d mm | *inch*	RPM max.	Pack.	**ROF 0.20** | *0.008"* Art.-No.	**SIC 80/1.2** Art.-No.	**STL 0.25** | *0.010"* Art.-No.	**FIB/PA 0.4** | *0.016"* Art.-No.
1	100 | *4*	12 | 1/2	21	19.2 | *3/4*	8,000	5	*320.341.19*	*320.821.19*	*320.703.19*	
2	100 | *4*	70 | *2 3/4*	23	19.2 | *3/4*	8,000	1	**323.348.19**	**323.828.19**	**323.704.19**	
	100 | *4*	100 | *4*	23	19.2 | *3/4*	8,000	1	*323.305.19*	*323.805.19*	*323.705.19*	**323.900.10**

	D mm | *inch*	A mm | *inch*	H	d mm | *inch*	RPM max.	Pack.	**STM 0.35** | *0.014"* Art.-No.	**SIC 80/1.2** Art.-No.	**SIC K 120/1.1** Art.-No.
2	100 | *4*	120 | *4 3/4*	23	12.7 | *1/2*	8,000	1	*323.770.13*	*323.820.13*	*323.830.13*

Bore must be indicated in the order. Standard bore with double keyway 5,2 x 23 mm delivery ex stock, short termed.
Other bores are available with extra charge: 1 - 10 pcs. EUR 5,50 / 11 - 25 pcs. EUR 3,50

3 Staple Set Wheel Brushes

D mm | *inch*	KL	A	d	KD	RPM max.	Pack.	**SIC 46/1.6** Art.-No.	**SIC 60/1.5** Art.-No.	**SIC 80/1.2** Art.-No.	**SIC 120/1.10** Art.-No.
140 | *5 1/2*	58	40	M 14	80	2,500	1	*402.881*	*402.882*	**402.880**	*402.883*
140 | *5 1/2*	90	75	M 14	80	2,500	1	*402.891*	*402.892*	**402.890**	*402.893*

4 Staple Set Disc Brushes

Filling	DA mm | *inch*	KD mm | *inch*	H mm | *inch*	d	RPM max.	Pack.	Art.-No.
SIC 46/1.6	130 | *5 1/8*	20 | *3/4*	50 | *2*	M 14 x 2.0	2,500	1	*405.843*
SIC 60/1.5	130 | *5 1/8*	20 | *3/4*	50 | *2*	M 14 x 2.0	2,500	1	*405.844*
SIC 80/1.2	130 | *5 1/8*	20 | *3/4*	50 | *2*	M 14 x 2.0	2,500	1	**405.845**

Special Models

Band Saw Brushes
Wheel Brushes in circular saws or band saws are used for cleaning the chipping space. A wheel brush with diameter 80-100 mm is pressed against the saw blade (circular or band saw). By moving the saw blade or band the brush is rolling and it taking the chipping out of the shipping space. Hence a built-up edge is prevented and the durability of the saw blade extended. The used wheel brushes usually are with steel wire, corded wire or nylon filament. The brushes are suitable for all common machines.

Stripping Brushes
For the removal of laquer and other insulations from cables and electric equipment. The polished surface and the concentric running enable soft removal of laquer from the wires.

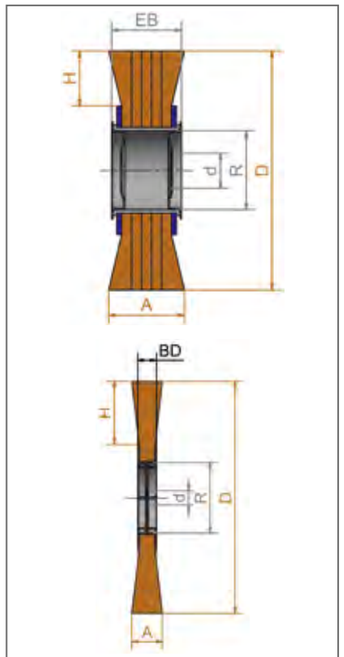

„A" can be up to 4 mm larger than „BD"
EB 3,0 mm with R > 60
EB 2,4 mm with R ≤ 60

Item Nos. in bold are available ex stock.
Consider our minimum order value for *italic printed* article numbers (see page 152).

STA = steel wire, crimped
STM = brass coated steel, crimped
STL = cord wire, crimped
PA = polyamide, crimped

Band Saw Brushes, polyamide

	D	A	H	d	RPM max.	Pack.	PA 0.50 | *0.020"* Art.-Nr.	PA 0.80 | *0.031"* Art.-No.	PA 1.00 | *0.039"* Art.-No.
	85	10	14	12	8,000	10	*300.091*		
1	100	13	21	12	8,000	10	**320.001**	**320.003**	**320.009**
	100	13	21	13	8,000	10	**320.004**		
2	100	13	21	SW 17	8,000	5	**320.00K.17**		
3	100	20-22	23	12	8,000	10		*323.002*	
	100	20	23	12	8,000	5		*323.003**	
1	125	13	33	13	8,000	5			**330.001**

* bore with plastic sleeve

Band Saw Brushes, steel wire

	D	A	H	d	RPM max.	Pack.	STA 0,20 Art.-No.	STA 0,30 Art.-No.	STM 0,20 Art.-No.	STM 0,30 Art.-No.	STL 4 x 0,25 Art.-No.
6	80	12	20	10	15,000	10	*312.141*				
5	100	12	21	SW 17	8,000	5		**320.16K.17**			
4	100	13	21	12.7	4,500	10		**320.161.12**			
	60	10-12	19	6	15,000	10			*300.742*		
	80	15	27	6.8	15,000	10			*311.742.01*		
	80	15	27	8	15,000	10				**311.762**	
7	80	18-20	27	6	15,000	10					**310.702.06**

8 Stripping Brushes

D mm | *inch*	A mm | *inch*	d mm | *inch*	Pack.	STA 0.10 | *0.004"* Art.-No.	STA 0.15 | *0.006"* Art.-No.	STA 0.20 | *0.008"* Art.-No.	STA 0.25 | *0.010"* Art.-No.	STA 0.30 | *0.012"* Art.-No.
30 | *1 1/4*	20 | *3/4*	6 | *1/4*	10	*301.213.10*	*301.213.15*	*301.213.20*		*301.213.30*
35 | *1 1/2*	20 | *3/4*	6 | *1/4*	10		*301.214.15*	**301.214.20**	available on demand	*301.214.30*
40 | *1 3/8*	25 | *1*	10 | *3/8*	10		*301.225.15*	**301.225.20**	*301.225.25*	*301.225.30*
80 | *3*	30 | *1 1/4*	16 | *5/8*	10			*301.236.20*	available on demand	*301.236.30*

Special Models

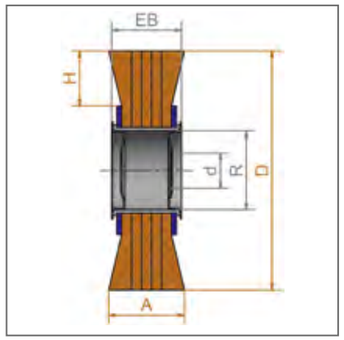

Small diameter crimped wheels SDW
LESSMANN small diameter crimped wheels have a manifold use, e.g. for deburring, cleaning, derusting or paint stripping on various work pieces and surfaces. A typical application e.g. is the cleaning of interior and exterior threads or the treatment of areas which are hard to reach.
The brushes are inserted directly into the machine or are mounted into a drilling machine or fast-moving item with a suitable drive arbor. Depending on the application and requirements several brushes can be mounted in a row. Suitable adapters are available on request.
The typical filling material LESSMANN offers is steel wire, stainless steel wire or abrasive nylon. On request other wire diameters and filling materials are available. All brushes are manufactured with a copper shell.

Wheel Brushes for the treatment of hard metal
Wheel brushes with diamond filling are often used for the rounding of edges of carbide or diamond tools.
Cutting edges on carbide tools extend the lifetime and allow a higher cutting speed. The treatment on major cutting edges of drills are mainly operated manually. LESSMANN wheel brushes with diamond support to decrease abrasion and to improve the surface quality of the work piece. Due to the consistent and narrow filling a clean and steady dipping of the edges is possible.
Surfaces of chip flutes of carbide drills are finished with brushes with aluminum oxide filling material. Finished chip flutes have a better process stability when drilling.

Stainless Steel Brushes
Information on working on stainless steel you find at www.lessmann.com

Item Nos. in bold are available ex stock.
Consider our minimum order value for *italic printed* article numbers (see page 152).

STH	= steel wire, high tensile, crimped
ROF	= stainless steel wire, crimped
SIC	= silicon carbide bristles
AO	= aluminium oxide bristles

1

2

3

4

Small Diameter crimped Wheels SDW

1

D mm | *inch*	A mm | *inch*	d mm | *inch*	H mm | *inch*	RPM max.	Pack.	STH 0.15 | *0.006"* Art.-No.	STH 0.20 | *0.008"* Art.-No.	STH 0.35 | *0.014"* Art.-No.	ROF 0.15 | *0.006"* Art.-No.
50 | *2*	10 | *3/8*	13 | *1/2*	13 | *1/2*	20,000	10	**35E.136**	**35E.146**		**35E.336**
63 | *2 1/2*	10 | *3/8*	13 | *1/2*	20 | *3/4*	20,000	10		**36E.146**	**36E.176**	
75 | *3*	12 | *1/2*	13 | *1/2*	20 | *3/4*	20,000	10				**37E.336**
75 | *3*	12 | *1/2*	16 | *5/8*	22 | *7/8*	15,000	10	**37E.137**	**37E.147**		

2

D mm | *inch*	A mm | *inch*	d mm | *inch*	H mm | *inch*	RPM max.	Pack.	SIC K120/0.6 Art.-No.	SIC K180/0.9 Art.-No.	SIC K320/0.6 Art.-No.
50 | *2*	10 | *3/8*	13 | *1/2*	12 | 1/2	15,000	10	**35E.846**	**35E.856**	**35E.876**
50 | *2*	10 | *3/8*	16 | *5/8*	12 | 1/2	15,000	10	**35E.847**	**35E.857**	**35E.877**
63 | *2 1/2*	10 | *3/8*	13 | *1/2*	18 | *5/8*	15,000	10	**36E.846**	**36E.856**	**36E.876**
63 | *2 1/2*	10 | *3/8*	16 | *5/8*	18 | *5/8*	15,000	10	**36E.847**		**36E.877**

Wheel Brushes for the treatment of hard metal

3

D mm | *inch*	A mm | *inch*	EB mm | *inch*	d mm | *inch*	H mm | *inch*	RPM max.	Pack.	Diamant K400 Art.-No.
150 | *6*	5 | *13/64*	11 | *7/16*	20 | *3/4*	23 | *59/64*	3,000	1	*408.819.DB*
150 | *6*	10 | *3/8*	16.5 | *21/32*	20 | *3/4*	23 | *59/64*	3,000	1	*408.829.DB*
150 | *6*	15 | *5/8*	22 | *7/8*	20 | *3/4*	23 | *59/64*	3,000	1	*408.839.DB*

4

D mm | *inch*	A mm | *inch*	EB mm | *inch*	d mm | *inch*	H mm | *inch*	RPM max.	Pack.	AO 600 Art.-No.
100 | *4*	15 | *5/8*	12 | *1/2*	16 | *5/8*	27 | *1*	3,000	1	*320.061**
150 | *6*	15 | *5/8*	15 | *5/8*	20 | *3/4*	23 | *59/64*	3,000	1	*345.051**

* Filling with angular cut

Adapters
With these adapters the bore can be reduced to the required size.
The wheel brushes are supplied with adapter sets which makes it possible to mount the brushes on all popular grinding machines.
The adapters have the following dimensions:

Set 1 / tube 30
30 / 1" / 22,2 / 20 / 16 / 1/2" / 12
Set 2 / tube 40:
40 / 32 / 1" / 22,2 / 20 / 16 / 1/2"
Set 3 / tube 50:
50 / 32 / 1" / 22,2 / 20 / 16 / 1/2"
Set 4 / tube 80 + 100:
brushes with metal discs, bore 50.8 and double keyway 7x13; plus adapter to bore 30. Further reduction possible with set 1.
Set 5 / tube 80 + 100:
brushes with metal discs, bore 50.8 and double keyway 7x13; plus adapter to bore 32. Further reduction possible with set 1.

A technical advice and safety information leaflet is included.

The practical adapter sets can also be ordered separately.

Single plastic reducing rings in many different dimensions can be supplied ex stock.

Drive Arbors
For use on drilling machines.

Metal Discs
Brushes with tube diameter 80 and 100 mm are supplied with our standard metal plates made of steel. Occasionally these metal plates are also required for brushes with smaller tubes. The metal plates on this page are therefore also suitable for the brushes on page 31 - 33. Please indicate the required bore size on your order and note that normally two metal plates are required for one brush.

Adapter

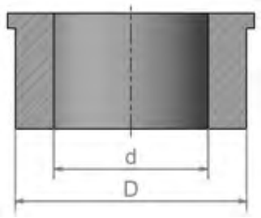

Drive Arbor Thread left

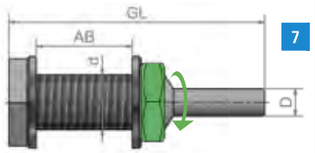

Drive Arbor Thread right

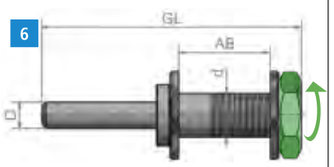

Item Nos. in bold are available ex stock.
Consider our minimum order value for *italic printed* article numbers (see page 152).

Adapter Sets

			D	d	Pack.	Art.-No.
1	Set 1	Tube 30	30	1" - 22.2 - 20 - 16 - 1/2" - 12	2	**000.886.63**
2	Set 2	Tube 40	40	32 - 1" - 22.2 - 20 - 16 - 1/2"	2	**000.886.64**
3	Set 3	Tube 50	50	32 - 1" - 22.2 - 20 - 16 - 1/2"	2	**000.886.65**
4	Set 4	Tube 80/100	50.8	30 (further adapters with Set 1)	2	**000.886.68**
	Set 5	Tube 80/100	50.8	32	2	**000.888.32**
5	Single plastic reducing rings in many different dimensions can be supplied ex stock.					

EAN

Drive Arbors

6

D mm | *inch*	GL mm | *inch*	d	AB	RPM max.	Pack.	Art.-No.
6 | *1/4*	60 | *2 3/8*	M 10 x 1,5	max. 18 mm	4,500	1	**000.041**
10 | *3/8*	60 | *2 3/8*	M 10 x 1,5	max. 18 mm	4,500	1	**000.042**
10 | *3/8*	75 | *3*	M 14 x 2,0	max. 11 mm	4,500	1	**000.043**

7

D mm | *inch*	GL mm | *inch*	d	AB	RPM max.	Pack.	Art.-No.
6 | *1/4*	40 | *1 3/8*	M 10 left	max. 30 mm	4,500	1	**000.044**
6 | *1/4*	50 | *2*	M 12 left	max. 15 mm	4,500	1	**000.045**

8 Metal Discs as Spare Part

	Pack.	Art.-No.
R 30	2	*000.631*
R 40	2	*000.641*
R 50	2	*000.651*
R 80	2	*000.661*
R100*	2	*000.671*

Bore must be indicated!
* On request with double keyset 12 x 7 (50.8 / 52.9 / 54.5)

LESSMANN
MADE IN GERMANY
MAX. RPM 3600

Deburring Brushes

Part before brushing

Part after brushing

Deburring Brushes
Specially developed wheel brushes for deburring. These are suitable for all common deburring machines. Although they are heavier than other brushes because of their dense filling, we exclude any inbalance by evenly arranged filling material and the testing of every brush. Filled with high-quality wire, these brushes have a longer service life.

All brushes are with double keyway. Please indicate the required bore.

On the following pages you will find the standard measurements. Special measurements are available on request.

Deburring Brushes with Cord Wire STL / ROL
Deburring Brushes with cord wire are usually used for working on very hard materials. This wire construction gives the wires additional hold, hence the output of the brush is increased.

Encapsulated Deburring Brushes
Are ideal for an aggressive and very exact working. An early beak of the wires can be prevented. Therefore the brush has a longer life time and a better durability.

Stainless Steel Brushes
LESSMANN brushes with stainless steel wire have green site plates.
More information for brush applications on stainless materials you will find at www.lessmann.com

For more information about deburring please ask for our leaflet "Deburring with brushes".

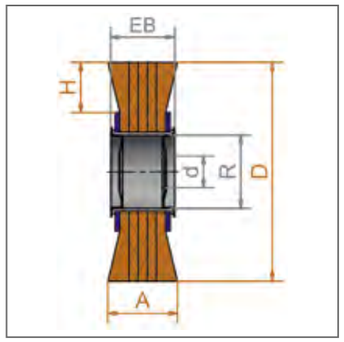

Item Nos. in bold are available ex stock.
Consider our minimum order value for *italic printed* article numbers (see page 152).

STH = steel wire, high tensile, crimped
STM = brass coated steel, crimped
STL = cord wire, crimped

1 2

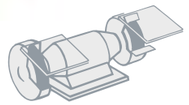

EAN **1 Deburring Brushes, Steel Wire**

D mm | *inch*	A mm | *inch*	EB	R mm | *inch*	H mm | *inch*	d Stand.	RPM max.	Pack.	**STH 0.20** | *0.008"* Art.-No.	**STH 0.35** | *0.014"* Art.-No.	**STH 0.50** | *0.020"* Art.-No.
250 | *10*	60 | *2 3/8*	58	100 | *4*	50 | *2*	50.8	3,600	1	**377.051**	**377.053**	**377.054**
250 | *10*	60 | *2 3/8*	55	100 | *4*	50 | *2*	100	3,600	1	*377.051.00*	*377.053.00*	*377.054.00*
250 | *10*	60 | *2 3/8*	53	100 | *4*	50 | *2*	50.8	3,600	1	*377.051.T1*	*377.053.T1*	*377.054.T1*
250 | *10*	60 | *2 3/8*	50	100 | *4*	50 | *2*	100	3,600	1	*377.051.TA*	**377.053.TA**	*377.054.TA*
250 | *10*	80 | *3 1/4*	79	100 | *4*	50 | *2*	50.8	3,600	1	*377.052*	*377.095*	*377.077*
250 | *10*	100 | *4*	99	100 | *4*	50 | *2*	50.8	3,600	1	*377.059*	*377.066*	*377.096*
300 | *12*	60 | *2 3/8*	49	100 | *4*	60 | *2 3/8*	50.8	3,000	1	*387.051*	**387.053**	*387.054*
300 | *12*	100 | *4*	93	100 | *4*	60 | *2 3/8*	50.8	3,000	1	available on demand	*387.055*	available on demand

EAN **2 Deburring Brushes, Cord Wire, Brass Coated Steel Wire**

D mm | *inch*	A mm | *inch*	EB	R mm | *inch*	H mm | *inch*	d Stand.	RPM max.	Pack.	**STL 0.38** | *0.015"* Art.-No.	**STM 0.38** | *0.015"* Art.-No.
250 | *10*	60 | *2 3/8*	58	100 | *4*	50 | *2*	50.8	3,600	1	**377.043**	*377.063*
250 | *10*	60 | *2 3/8*	55	100 | *4*	50 | *2*	100	3,600	1	*377.043.00*	*377.063.00*
250 | *10*	60 | *2 3/8*	53	100 | *4*	50 | *2*	50.8	3,600	1	*377.043.T1*	*377.063.T1*
250 | *10*	60 | *2 3/8*	50	100 | *4*	50 | *2*	100	3,600	1	*377.043.TA*	*377.063.TA*
250 | *10*	80 | *3 1/4*	79	100 | *4*	50 | *2*	50.8	3,600	1	*377.045*	available on demand
250 | *10*	100 | *4*	99	100 | *4*	50 | *2*	50.8	3,600	1	*377.048*	available on demand

All brushes with metal disc and bore 50.8 mm and double keyway 13 x 7 mm!
Further standard bores: 52.9 / 54.5 mm; d min/max: 30 mm ≤ d ≤ R; Deburring Brushes also available with tube 120.

1 2 3 4

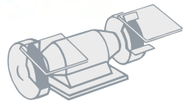

Deburring Brushes, Stainless Steel Wire

D mm | *inch*	A mm | *inch*	EB	R	H	d Stand.	RPM max.	Pack.	1 ROH 0.20 | *0.008"* Art.-No.	1 ROH 0.35 | *0.014"* Art.-No.	1 ROH 0.50 | *0.020"* Art.-No.	2 ROL 0.35 | *0.014"* Art.-No.
250 | *10*	60 | *2 3/8*	58	100	50	50.8	3,600	1	**377.044**	**377.089**	*377.094*	**377.707**
250 | *10*	60 | *2 3/8*	55	100	50	100	3,600	1	*377.044.00*	*377.089.00*	*377.094.00*	*377.707.00*
250 | *10*	60 | *2 3/8*	53	100	50	50.8	3,600	1	*377.044.T1*	*377.089.T1*	*377.094.T1*	*377.707.T1*
250 | *10*	60 | *2 3/8*	50	100	50	100	3,600	1	*377.044.TA*	*377.089.TA*	*377.094.TA*	*377.707.TA*
250 | *10*	80 | *3 1/4*	79	100	50	50.8	3,600	1	*377.047*	*377.090*	*377.097*	available on demand
250 | *10*	100 | *4*	99	100	50	50.8	3,600	1	*377.049*	*377.093*	*377.099*	available on demand
300 | *12*	100 | *4*	95	100	60	50.8	3,000	1	available on demand	available on demand	available on demand	available on demand

All brushes with metal disc and bore 50.8 mm and double keyway 13 x 7 mm!
Further standard bores: 52.9 / 54.5 mm; d min/max: 30 mm ≤ d ≤ R; Deburring Brushes also available with tube 120.

Deburring Brushes, encapsulated

D mm | *inch*	A mm | *inch*	R	H	d Stand.	Pack.	3 STH 0.20 | *0.008"* Art.-No.	3 STH 0.35 | *0.014"* Art.-No.	4 ROH 0.20 | *0.008"* Art.-No.	4 ROH 0.35 | *0.014"* Art.-No.
250 | *10*	13 | *1/2*	100	58	33	1	*370.241.KG*	**370.271.KG**	**370.441.KG**	**370.471.KG**
250 | *10*	20 | *3/4*	100	57	33	1	*370.242.KG*	*370.272. KG*	**370.442.KG**	**370.472.KG**

2 1

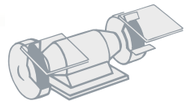

1 Deburring Brushes, Silicon Carbide Bristles

D mm | *inch*	A mm | *inch*	EB	R mm | *inch*	H mm | *inch*	d Stand.	RPM max.	Pack.	SIC 80/1.2 Art.-No.	SIC 120/1.1 Art.-No.	SIC 180/1.0 Art.-No.	SIC 320/0.56 Art.-No.
250 | *10*	60 | *2 3/8*	58	100 | *4*	50 | *2*	50.8	3,600	1	*377.824*	**377.835**	**377.854**	*377.875*
250 | *10*	60 | *2 3/8*	55	100 | *4*	50 | *2*	100	3,600	1	*377.824.00*	*377.835.00*	*377.854.00*	*377.875.00*
250 | *10*	60 | *2 3/8*	53	100 | *4*	50 | *2*	50.8	3,600	1	*377.824.T1*	*377.835.T1*	*377.854.T1*	*377.875.T1*
250 | *10*	60 | *2 3/8*	50	100 | *4*	50 | *2*	100	3,600	1	*377.824.TA*	*377.835.TA*	*377.854.TA*	*377.875.TA*
250 | *10*	80 | *3 1/4*	79	100 | *4*	50 | *2*	50.8	3,600	1	available on demand	*377.837*	available on demand	available on demand
250 | *10*	100 | *4*	99	100 | *4*	50 | *2*	50.8	3,600	1	available on demand	*377.839*	available on demand	available on demand
300 | *12*	60 | *2 3/8*	55	100 | *4*	60 | *2 3/8*	50.8	3,000	1	*387.824*	available on demand	available on demand	available on demand
300 | *12*	100 | *4*	95	100 | *4*	60 | *2 3/8*	50.8	3,000	1	available on demand	available on demand	available on demand	available on demand

2 Deburring Brushes, mixed filament

D mm | *inch*	A mm | *inch*	EB	R mm | *inch*	H mm | *inch*	d Stand.	RPM max.	Pack.	ROF 0.20 - SIC 120 Mixed filament with mixing proportion 1:1 Art.-No.
250 | *10*	60 | *2 3/8*	58	100 | *4*	50 | *2*	50.8	3,600	1	*377.091*
250 | *10*	60 | *2 3/8*	55	100 | *4*	50 | *2*	100	3,600	1	*377.091.00*

All brushes with metal disc and bore 50.8 mm and double keyway 13 x 7 mm!
Further standard bores: 52.9 / 54.5 mm; d min/max: 30 mm ≤ d ≤ R; Deburring Brushes also available with tube 120.

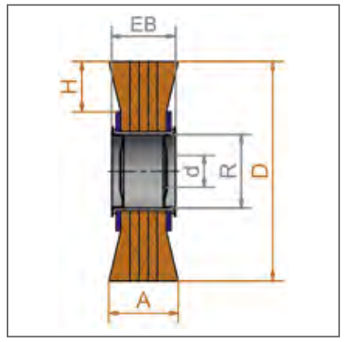

Item Nos. in bold are available ex stock.
Consider our minimum order value for *italic printed* article numbers (see page 152).

STH = steel wire, high tensile, crimped
ROL = stainless steel, cord wire
ROH = stainless steel wire, high tensile, crimped
ROF = stainless steel wire, crimped
SIC = silicon carbide bristles

Roller Brushes

Roller Brushes
Roller Brushes for the use in deburring machines. For Deburring e.g. cutting edges of tubes.
As filling material you can choose from steel and stainless steel wire, brass coated steel wire or cord wire. These brushes feature with their dense filling.

Roller Brushes
Deburring brushes are available with
D = 250 - 400 mm and
A = 55 - 700 mm

In your inquiry please indicate measure D, A and the bore e. g. 50.8 mm, 52.9 mm or 54.5 mm with double keyway 13 x 7 mm. Other bores up to 120 mm are available on demand.

Moreover we offer with our welded metal plate special collets for the roller brushes. Bores and keyways will be produced customized.

Note: Due to our advanced manufacturing technology it is possible to produce balanced roller brushes without balancing weights. Hence the brush has a steady run throughout its whole lifetime.

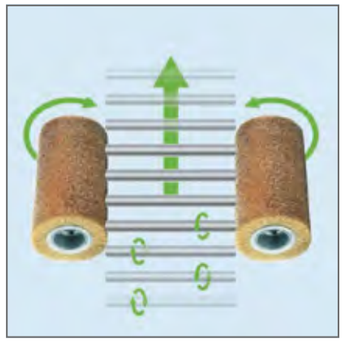

Function chart of a deburring machine with roller brushes

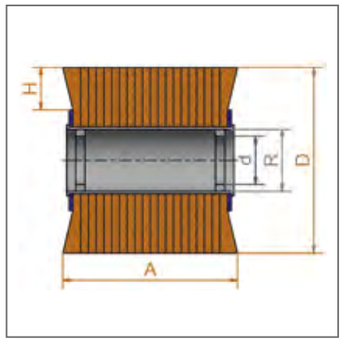

Item Nos. in bold are available ex stock.
Consider our minimum order value for *italic printed* article numbers (see page 152).

STH	= steel wire, high tensile, straight
STL	= cord wire, crimped
ROH	= stainless steel wire, high tensile, crimped
SIC	= silicon carbide bristles

Strip brushes for deburring machines you find on pages 146 - 147.

Roller Brushes, Steel Wire

D	A	R	H	d	RPM	Pack.	**STH 0.20** | *0.008"*	**STH 0.35** | *0.014"*	**STH 0.50** | *0.020"*	**STL 0.38** | *0.015"*
mm | *inch*	mm | *inch*	mm | *inch*	mm | *inch*	Stand.	max.		Art.-No.	Art.-No.	Art.-No.	Art.-No.
250 | *10*	300 | *12*	100 | *4*	50 | *2*	100	3,600	1	*377.240.30*	*377.270.30*	*377.290.30*	*377.780.30*
250 | *10*	460 | *18*	100 | *4*	50 | *2*	100	3,600	1	*377.240.46*	*377.270.46*	*377.290.46*	*377.780.46*
250 | *10*	600 | *24*	100 | *4*	50 | *2*	100	3,600	1	*377.240.60*	*377.270.60*	*377.290.60*	*377.780.60*
300 | *12*	460 | *18*	100 | *4*	60 | *2 3/8*	100	3,000	1	*387.240.46*	*387.270.46*	*387.290.46*	*387.780.46*
300 | *12*	460 | *18*	120 | *4 3/4*	50 | *2*	120	3,000	1	*388.240.46*	*388.270.46*	*388.290.46*	*388.780.46*
300 | *12*	600 | *24*	120 | *4 3/4*	50 | *2*	120	3,000	1	*388.240.60*	*388.270.60*	*388.290.60*	*388.780.60*

Roller Brushes, Stainless Steel, Abrasive Bristles

D	A	R	H	d	RPM	Pack.	**ROH 0.20** | *0.008"*	**ROH 0.35** | *0.014"*	**ROH 0.50** | *0.020"*	**SIC 120 / 1.1**
mm | *inch*	mm | *inch*	mm | *inch*	mm | *inch*	Stand.	max.		Art.-No.	Art.-No.	Art.-No.	Art.-No.
250 | *10*	300 | *12*	100 | *4*	50 | *2*	100	3,600	1	*377.440.30*	*377.470.30*	*377.490.30*	*377.830.30*
250 | *10*	460 | *18*	100 | *4*	50 | *2*	100	3,600	1	*377.440.46*	*377.470.46*	*377.490.46*	*377.830.46*
250 | *10*	600 | *24*	100 | *4*	50 | *2*	100	3,600	1	*377.440.60*	*377.470.60*	*377.490.60*	*377.830.60*
300 | *12*	460 | *18*	100 | *4*	60 | *2 3/8*	100	3,000	1	*387.440.46*	*387.470.46*	*387.490.46*	*387.830.46*
300 | *12*	460 | *18*	120 | *4 3/4*	50 | *2*	120	3,000	1	*388.440.46*	*388.470.46*	*388.490.46*	*388.830.46*
300 | *12*	600 | *24*	120 | *4 3/4*	50 | *2*	120	3,000	1	*388.440.60*	*388.470.60*	*388.490.60*	*388.830.60*

Other measurements and filling materials as well as collets in special measurements are available on request.

Deburring End Brushes

Deburring End Brushes
These brushes are perfect for deburring tubes, profiles or even plane surfaces. Deburring end brushes are used in a set of 8, 16 or 24 single end brushes integrated in one deburring device.

The metal bush fits all standard collets.

Stainless Steel
Information on working on stainless steel material you find at. www.lessmann.com

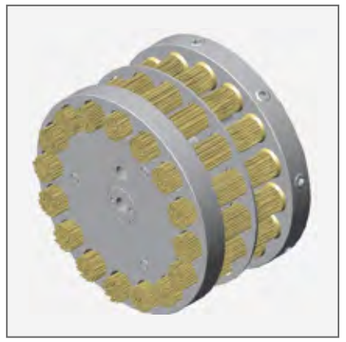

Deburring device for deburring end brushes

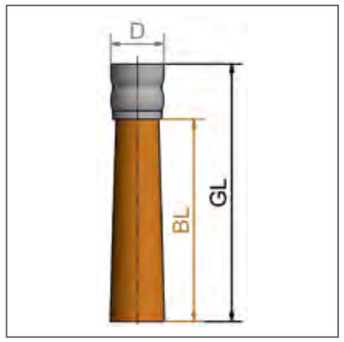

Item Nos. in bold are available ex stock.
Consider our minimum order value for *italic printed* article numbers (see page 152).

STH	= steel wire, high tensile, straight
STL	= cord wire, crimped
ROH	= stainless steel wire, high tensile, crimped
SIC	= silicon carbide bristles

1 Deburring End Brushes, Steel Wire

D mm | *inch*	GL mm | *inch*	BL mm | *inch*	Pack.	**STH 0.20** | *0.008"* Art.-No.	**STH 0.35** | *0.014"* Art.-No.	**STH 0.50** | *0.020"* Art.-No.
25 | *1*	120 | *4 3/4*	95 | *3 1/2*	16	**048.241**	**048.271**	**048.291**

2 Deburring End Brushes, CordWire

D mm | *inch*	GL mm | *inch*	BL mm | *inch*	Pack.	**STL 0.35** | *0.014"* Art.-No.	**STL 0.38** | *0.015"* Art.-No.
25 | *1*	120 | *4 3/4*	95 | *3 1/2*	16	**048.701**	*048.081*

3 Deburring End Brushes, Stainless Steel Wire

D mm | *inch*	GL mm | *inch*	BL mm | *inch*	Pack.	**ROH 0.20** | *0.008"* Art.-No.	**ROH 0.35** | *0.014"* Art.-No.	**ROH 0.50** | *0.020"* Art.-No.
25 | *1*	120 | *4 3/4*	95 | *3 1/2*	16	**048.441**	**048.471**	**048.491**

Deburring End Brushes, Silicon Carbide Bristles, mixed wire

				4			5
D mm | *inch*	GL mm | *inch*	BL mm | *inch*	Pack.	**SIC 80 / 1.2** Art.-No.	**SIC 120 / 1.1** Art.-No.	**SIC 180 / 1.0** Art.-No.	**SIC 120 / 1.1 - ROH 0.20** Art.-No.
25 | *1*	120 | *4 3/4*	95 | *3 1/2*	16	**048.821**	**048.841**	**048.851**	**048.901***
25 | *1*	120 | *4 3/4*	95 | *3 1/2*	16				**048.941****

* Mixing proportion 1:1 | ** Mixing proportion 2:1

Brush Adapter for deburring end brushes

Suitable for all common deburring machines	Art.-No
Device for 8 End Brushes	available on demand
Device for 16 End Brushes	*048.999*
Device for 24 End Brushes	*048.998*

LESSMANN

Cup Brushes

Cup Brushes
Knot cup brushes are for heavy duty use: for the preparing of metal surfaces before painting, the removal of slag, rust, scale or concrete waste.
The brushes diameter 80/100/125 mm (Art. No. 484/486/487) have a **bridle** fitted for stability. The bridle can be removed after wear of the wire exposing a further 20 mm of useable wire!

We recommend the use of our brush with diameter 90 mm for small angle grinders. Compared to the common brush with diameter 65 mm this model has 50% more wire and it is really something special in the brush market!

Knot Cup Brushes with extra long filling
For the use on large areas and for a flexible cleaning and derusting of e.g. shipyards. For a use in angle grinders. Easy working also in areas which are hard to reach.

Cup Brushes, left-right knotted
Left-right knotted cup brushes usually are more aggressive, hence they are often used for heavy brushing operations.
Besides the knots open less, therefore they are ideal for the treatment of edges.

Cup Brushes
Cup brushes with crimped wire are ideal for working on large surfaces with angle grinders. They can also be used for the removal of rust, paint, dirt or scale and for polishing.

Special Designs
The cup brushes can be delivered with different filling materials according to your requirements e. g. brushes with brass cups and brass wire for non-sparkling applications.

For promoting sales all standard wheel brushes are packed individually for self display. They are also available in bulk.

Stainless Steel Brushes
LESSMANN brushes with stainless steel wire have green cups. More information for brush applications on stainless materials you will find at www.lessmann.com

Chunky packaging
Many articles you receive as standard in handy covering boxes (10 pieces per carton).

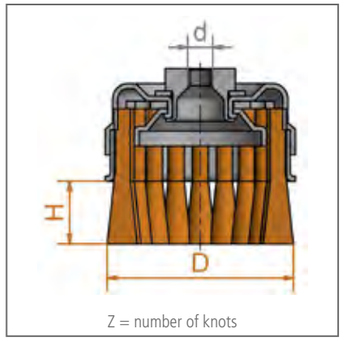

Item Nos. in bold are available ex stock.
Consider our minimum order value for *italic printed* article numbers (see page 152).

STH = steel wire, high tensile, straight
STM = brass coated steel, straight

EAN

Knot Cup Brushes without Bridle, 1 Row, Steel Wire, Brass coated Steel Wire

	D mm | *inch*	d	H mm | *inch*	Z	RPM max.	Pack.	STH 0.35 | *0.014"* Art.-No.	STH 0.50 | *0.020"* Art.-No.	STH 0.80 | *0.031"* Art.-No.	7 STM 0.35 | *0.014"* Art.-No.	7 STM 0.50 | *0.020"* Art.-No.
1 2 3	65 | *2 1/2*	M 10 x 1.5	20 | *3/4*	18	12,500	1	**482.114***	**482.214***	available on demand		
1 2 3	65 | *2 1/2*	M 14 x 2.0	20 | *3/4*	18	12,500	1	**482.117***	**482.217***	**482.317***	**482.117.SM***	**482.217.SM***
1 2 3	75 | *3*	M 14 x 2.0	20 | *3/4*	20	12,500	1	**483.117***	**483.217***	*483.317*		
1 2 3	90 | *3 1/2*	M 14 x 2.0	22 | *7/8*	20	11,500	1	*485.137**	**485.237***	*485.337*		**485.237.SM***
1 2 3	100 | *4*	M 14 x 2.0	25 | *1*	26	9,000	1	available on demand	**486.237***	available on demand		
1 2 3	125 | *5*	M 14 x 2.0	25 | *1*	32	7,000	1	available on demand	**487.237**	available on demand		
1 2 3	150 | *6*	M 14 x 2.0	30 | *1 1/4*	36	6,600	1	available on demand	**488.237**	available on demand		
1 2 3	150 | *6*	5/8"-11 UNC	30 | *1 1/4*	36	6,600	1	available on demand	*488.238*	available on demand		
4	65 | *2 1/2*	M 14 x 2.0	20 | *3/4*	18	12,500	1	available on demand	**482.217.WZ***			

EAN

5 Knot Cup Brushes, without Bridle, 1 Row, Steel Wire, with extra long filling

D mm | *inch*	d	H mm | *inch*	Z	RPM max.	Pack.	STH 0.35 | *0.014"* Art.-No.	STH 0.50 | *0.020"* Art.-No.
80 | *3 1/4*	M 14 x 2.0	33 | *1 1/4*	18	12,500	25	**480.117**	*480.217*

EAN

6 Knot Cup Brushes without Bridle, 2 Rows, Steel Wire

D mm | *inch*	d	H mm | *inch*	Z	RPM max.	Pack.	STH 0.35 | *0.014"* Art.-No.	STH 0.50 | *0.020"* Art.-No.	STH 0.80 | *0.031"* Art.-No.
100 | *4*	5/8" - 11 UNC	25 | *1*	26+20	9,000	1	*486.148*	*486.248*	*486.348*
125 | *5*	5/8" - 11 UNC	25 | *1*	32+26	7,000	1	available on demand	*487.248*	available on demand
150 | *6*	5/8" - 11 UNC	25 | *1*	36+32	6,600	1	available on demand	*488.248*	available on demand

* Packed 10 pieces per carton

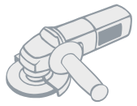

EAN

Knot Cup Brushes with Bridle, 1 Row, Steel Wire

D mm | *inch*	d mm | *inch*	H mm | *inch*	H_1 mm | *inch*	Z	Pack.	**STH 0.35** | *0.014"* Art.-No.	**STH 0.50** | *0.020"* Art.-No.	**STH 0.80** | *0.031"* Art.-No.
80 | *3 1/4*	22.2 | *7/8*	25 | *1*	15 | *5/8*	20	1	*484.111*	*484.211**	**484.311***
80 | *3 1/4*	M 14 x 2.0	25 | *1*	15 | *5/8*	20	1	**484.117***	**484.217***	**484.317***
80 | *3 1/4*	5/8" - 11 UNC	25 | *1*	15 | *5/8*	20	1	*484.118*	**484.218**	*484.318*
100 | *4*	22.2 | *7/8*	23 | *7/8*	12 | *1/2*	26	1	**486.111**	**486.211***	**486.311***
100 | *4*	M 14 x 2.0	23 | *7/8*	12 | *1/2*	26	1	**486.117***	**486.217***	**486.317***
100 | *4*	5/8" - 11 UNC	23 | *7/8*	12 | *1/2*	26	1	*486.118*	**486.218***	*486.318**
125 | *5*	22.2 | *7/8*	23 | *7/8*	15 | *5/8*	32	1	*487.111*	**487.211**	**487.311**
125 | *5*	M 14 x 2.0	23 | *7/8*	15 | *5/8*	32	1	**487.117**	**487.217**	**487.317**
125 | *5*	5/8" - 11 UNC	23 | *7/8*	15 | *5/8*	32	1	*487.118*	**487.218**	*487.318*

* Packed 10 pieces per carton.
After removing the bridle there is the following further trimming length (see measure H1).

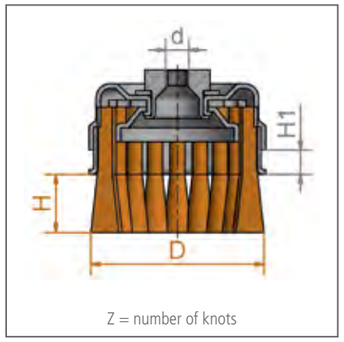

Z = number of knots

Item Nos. in bold are available ex stock.
Consider our minimum order value for *italic printed* article numbers (see page 152).

STH = steel wire, high tensile, straight

ROH = stainless steel wire, high tensile, straight

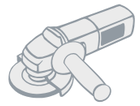

EAN

Knot Cup Brushes without Bridle, 1 Row, Stainless Steel Wire

	D mm | *inch*	d	H mm | *inch*	Z	RPM max.	Pack.	**ROH 0.35** | *0.014"* Art.-No.	**ROH 0.50** | *0.020"* Art.-No.
1	65 | *2 1/2*	M 10 x 1.5	20 | *3/4*	18	12,500	1	*482.714*	*482.814**
1	65 | *2 1/2*	M 14 x 2.0	20 | *3/4*	18	12,500	1	**482.717***	**482.817***
1	75 | *3*	M 14 x 2.0	20 | *3/4*	20	12,500	1	available on demand	*483.817**
1	80 | *3 1/4*	M 14 x 2.0	33 | *1 1/4*	18	15,500	25	**480.717**	available on demand
2	65 | *2 1/2*	M 14 x 2.0	20 | *3/4*	18	12,500	1	available on demand	**482.817.WZ***

EAN

3 Knot Cup Brushes with Bridle, 1 Row, Stainless Steel Wire

D mm | *inch*	d mm | *inch*	H mm | *inch*	H_1 mm | *inch*	Z	RPM max.	Pack.	**ROH 0.35** | *0.014"* Art.-No.	**ROH 0.50** | *0.020"* Art.-No.
80 | *3 1/4*	22.2 | *7/8*	25 | *1*	15 | *5/8*	20	9,000	1	*484.711*	*484.811*
80 | *3 1/4*	M 14 x 2.0	25 | *1*	15 | *5/8*	20	9,000	1	**484.717**	**484.817***
80 | *3 1/4*	5/8" - 11 UNC	25 | *1*	15 | *5/8*	20	9,000	1	*484.718*	*484.818*
100 | *4*	22.2 | *7/8*	23 | *7/8*	12 | *1/2*	26	9,000	1	*486.711*	*486.811*
100 | *4*	M 14 x 2.0	23 | *7/8*	12 | *1/2*	26	9,000	1	**486.717***	**486.817***
100 | *4*	5/8" - 11 UNC	23 | *7/8*	12 | *1/2*	26	9,000	1	*486.718*	*486.818*
125 | *5*	M 14 x 2.0	23 | *7/8*	15 | *5/8*	32	9,000	1	available on demand	**487.817**

* Packed 10 pieces per carton

Cup Brushes

Cup Brushes with Crimped Wire

D mm | *inch*	d mm | *inch*	H	RPM max.	Pack.	1 STA 0.20 | *0.008"* Art.-No.	1 STA 0.35 | *0.014"* Art.-No.	1 STA 0.50 | *0.020"* Art.-No.	2 ROH 0.30/0.35 | *0.012"* Art.-No.	3 MES 0.30 | *0.012"* Art.-No.
65 | *2 3/8*	M 10 x 1,5	20	12,000	1		**421.164***		*421.364*	*421.564*
65 | *2 3/8*	M 14 x 2.0	20	12,000	1	**421.147**	**421.167***	**421.197**	**421.367***	**421.567***
75 | *3*	M 14 x 2.0	22	12,500	1		**423.167***	available on demand	**423.367***	available on demand
75 | *3*	5/8" - 11 UNC	22	12,500	1		**423.168***	available on demand	*423.368*	available on demand
80 | *3 1/4*	22.2 | *7/8*	25	8,500	1		**424.171***	available on demand	*424.361*	available on demand
80 | *3 1/4*	M 14 x 2.0	25	8,500	1	**424.147**	**424.177***	**424.197**	**424.367***	**424.567**
80 | *3 1/4*	5/8" - 11 UNC	25	8,500	1		*424.178*	*424.198*	*424.368*	available on demand
100 | *4*	22.2 | *7/8*	30	9,000	1		**426.171***	*426.191*	*426.361*	
100 | *4*	M 14 x 2.0	30	9,000	1	**426.147***	**426.177***	**426.197***	**426.367***	**426.567**
100 | *4*	5/8" - 11 UNC	30	9,000	1		**426.178***	*426.198*	*426.368*	*426.568*
125 | *5*	22.2 | *7/8*	30	8,000	1		**427.171**	available on demand	available on demand	available on demand
125 | *5*	M 14 x 2.0	30	8,000	1	**427.147**	**427.177**	**427.297**	**427.367***	**427.567***
125 | *5*	5/8" - 11 UNC	30	8,000	1		**427.178**	*427.298*		
150 | *6*	22.2 | *7/8*	40	6,500	1		**429.171**	*429.191*		
150 | *6*	M 14 x 2.0	40	6,500	1		**429.177**	*429.197*	*429.367*	
150 | *6*	5/8" - 11 UNC	40	6,500	1		*429.178*	*429.198*		

Cup Brushes, Brass Coated Steel Wire, Abrasive Filament

D mm | *inch*	d	H	RPM max.	Pack.	STL 0.35 | *0.014"* Art.-No.	STM 0.30 | *0.012"* Art.-No.	4 SIC 80/1.2 Art.-No.	4 SIC 180/0.9 Art.-No.
65 | *2 3/8*	M 14 x 2.0	20	12,000	1		**421.767**	**421.827**	*421.857*
100 | *4*	22.2 | *7/8*	30	9,000	1	*426.701*			
100 | *4*	M 14 x 2.0	30	9,000	1	*426.707*	**426.767**		

* Packed 10 pieces per carton

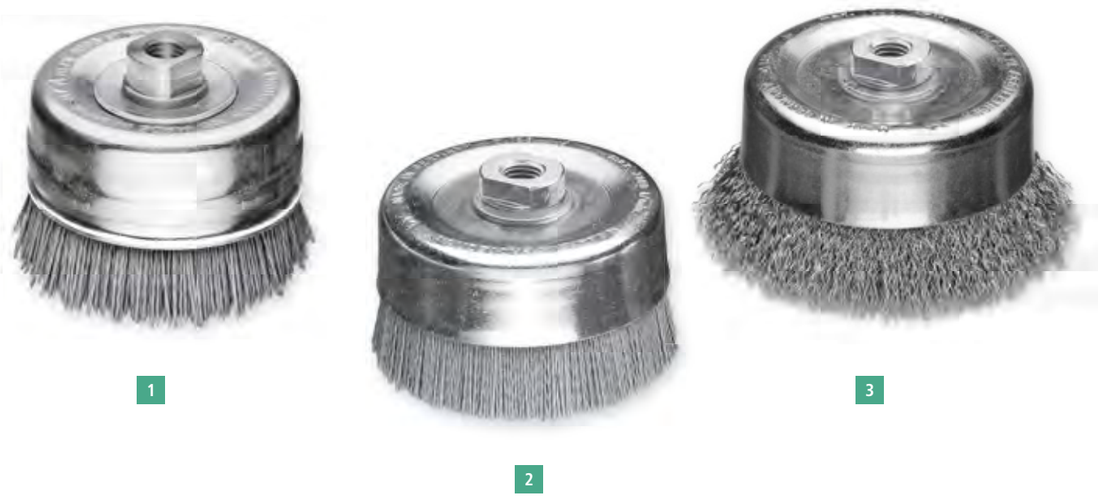

Cup Brushes, Straight Filament

	D mm | *inch*	d mm | *inch*	H	RPM max.	Pack.	STH 0.35 | *0.014"* Art.-No.	STM 0.35 | *0.014"* Art.-No.	STL 0.35 Art.-No.	SIC 80/1.2 Art.-No.	SIC K180/1.0 Art.-No.
1	90 | *3 1/2*	M 14	25	9,000	1				**446.827***	***446.857****
1	90 | *3 1/2*	22.2 | *7/8*	25	9,000	1				available on demand	*446.851**
3	100 | *4*	M 14	30	9,000	1	*446.277**	*446.777**			
3	100 | *4*	22.2 | *7/8*	30	9,000	1	*446.271**	*446.771**	**446.701***		
2	110 | *4 1/2*	M 14	30	7,000	1				**447.827***	**447.857***
3	125 | *5*	M 14	30	7,000	1	**447.277***	available on demand	*447.707*		

1 with bridle | * Packed 10 pieces per carton

Cup Brushes with Straight Wire
They are used for deburring surfaces, mostly in machining centers. The brushes are available with steel wire, stainless steel wire, abrasive nylon or any other filament. Due to the straight cup the filament of the brush is less flaring out and more cone points of the bristles work on the surface. Please contact us for more information!

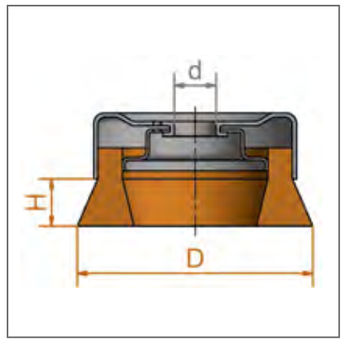

Item Nos. in bold are available ex stock.
Consider our minimum order value for *italic printed* article numbers (see page 152).

STA = steel wire, crimped
STH = steel wire, high tensile, straight
STM = brass coated steel, crimped
STL = cord wire, crimped
ROH = stainless steel wire, high tensile, straight
MES = brass wire, crimped
SIC = silicon carbide bristles

Bevel Brushes

Bevel Brushes
The special shape of these brushes enables the user to work in hard to reach places. The knots are left hand twisted to increase stability. For promoting sales all standard knot bevel brushes are packed individually for self display. These brushes are also available bulk packed.

Wheel Brushes with thread
Like bevel brushes, wheel brushes with a thread are ideal for working in areas which are hard to reach. Usually the brushes are used on angle grinders.

Other measurements and filling materials are available on request.

Stainless Steel Brushes
LESSMANN brushes with stainless steel wire have green cups. We use wire with material number 1.4310. Material number 1.4401 can be used on request.
More information for brush applications on stainless materials you will find at www.lessmann.com

Bevel Brushes, left-right knotted
Left-right knotted bevel brushes usually are more aggressive, hence they are often used for heavy brushing operations.
Besides the knots open less, therefore there are ideal for the treatment of edges.

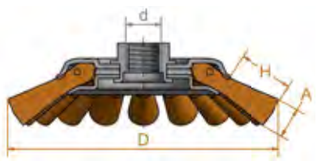

Z = number of knots

Item Nos. in bold are available ex stock.
Consider our minimum order value for *italic printed* article numbers (see page 152).

STA	= steel wire, crimped
STM	= brass coated steel wire
STH	= steel wire, high tensile, straight
ROF	= stainless steel wire, crimped
ROH	= stainless steel wire, high tensile, straight

EAN **Knot Bevel Brushes, Steel Wire, Stainless Steel Wire**

D mm | *inch*	A mm | *inch*	d mm | *inch*	H	Z	RPM max.	Pack.	1 STH 0.35 | *0.014"* Art.-No.	1 STH 0.50 | *0.020"* Art.-No.	2 ROH 0.35 | *0.014"* Art.-No.	2 ROH 0.50 | *0.020"* Art.-No.
100 | *4*	12 | *1/2*	M 10 x 1.5	20	18	15,000	1		**471.254**		
100 | *4*	12 | *1/2*	M 14 x 2.0	20	18	15,000	1	**471.157***	**471.257**	**471.757***	**471.857***
115 | *4 1/2*	12 | *1/2*	M 14 x 2.0	24	20	15,000	1	**472.157***	**472.257**	**472.757***	**472.857***
115 | *4 1/2*	12 | *1/2*	M 14 x 2.0	24	24	15,000	1		**472.257.V4***		
125 | *5*	12 | *1/2*	M 14 x 2.0	29	20	15,000	1		**473.257***		**473.857**
3 115 | *4 1/2*	12 | *1/2*	M 14 x 2.0	24	20	15,000	1		**472.257.WZ***		**472.857.WZ***

EAN **4 Knot Bevel Brushes, Steel Wire, Brass coated steel wire**

D mm | *inch*	A mm | *inch*	d mm | *inch*	H	Z	RPM max.	Pack.	STM 0.35 | *0.014"* Art.-No.	STM 0.50 | *0.020"* Art.-No.
100 | *4*	12 | *1/2*	M 14 x 2.0	20	18	15,000	1	**471.157.SM***	
115 | *4 1/2*	12 | *1/2*	M 14 x 2.0	24	20	15,000	1		**472.257.SM***

EAN **Bevel Brushes, Crimped Wire**

D mm | *inch*	A mm | *inch*	d	H	RPM max.	Pack.	5 STA 0.35 | *0.014"* Art.-No.	6 ROF 0.30 | *0.012"* Art.-No.	6 STM 0.30 | *0.012"* Art.-No.
100 | *4*	10 | *3/8*	M 14 x 2.0	20	15,000	1	**422.177***	**422.367***	**422.767**

EAN **7 Wheel Brushes, crimped wire, with thread**

D mm | *inch*	A mm | *inch*	d	H	RPM max.	Pack.	ROF 0.30 | *0.012"* Art.-No.	STM 0.30 | *0.012"* Art.-No.
115 | *4 1/2*	12 | *1/2*	M 14	24	12,500	1	*304.361.14*	**304.761.14**
125 | *5*	13 | *1/2*	M 14	19.5	12,500	1	**335.361.14**	**335.761.14**

* Packed 10 pieces per carton

Brushes for grass trimmers

Bevel Brushes

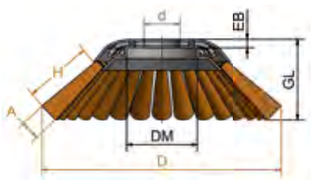

Brushes for grass trimmers
Knotted brushes on grass trimmers are ideal for removing weeds on grass pavers, curb-stones, cobbled areas or other spots which are hard to reach. Those brushes clean larger areas like courtyards, terraces or longer alleys effortless and sustainable.

Besides, brushes are ecologically friendly and they remove weeds fast and effectively.

Attention: When working with brushes on grass trimmers, please be aware of stringent safety rules. Please take note of the data sheet we attach the brushes or have a look at www.lessmann.com.

Right adaption of the brush

Wheel Brushes

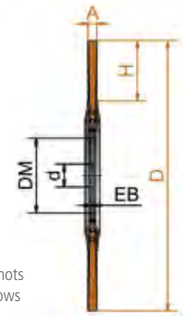

ZF = Knot type
Z = number of knots
R = number of rows

Item Nos. in bold are available ex stock.
Consider our minimum order value for *italic printed* article numbers (see page 152).

STM = brass coated steel, straight
STH = steel wire, high tensile, straight

EAN

Knotted Bevel Brushes, for grass trimmers

	D mm | *inch*	A mm | *inch*	EB	DM	H mm | *inch*	GL	Z	d mm | *inch*	ZF	RPM max.	Pack.	STH 0.50 | *0.020"* Art.-No.	STM 0.50 | *0.020"* Art.-No.
1	170 | *6 3/4*	12 | *1/2*	6	50	50 | *2*	58	32	20 | *3/4*	B	10,000	1	**475.250.01**	
1	170 | *6 3/4*	12 | *1/2*	6	50	50 | *2*	58	32	25.4 | *1*	B	10,000	1	**475.251.01**	
2	200 | *8*	14 | *9/16*	6	64	37 | *1 1/2*	55	36	20 | *3/4*	B	10,000	1	**476.250.01**	**476.250.SM**
2	200 | *8*	14 | *9/16*	6	64	37 | *1 1/2*	55	36	25.4 | *1*	B	10,000	1	**476.251.01**	**476.251.SM**

The brushes are suitable for all common grass trimmer and brush cutter models. Possible special diameters or special bores are deliverable on demand.

EAN

Knotted Wheel Brushes, for grass trimmers

	D mm | *inch*	A mm | *inch*	EB	DM	H mm | *inch*	Z	d mm | *inch*	ZF	RPM max.	Pack.	STH 0.50 | *0.020"* Art.-No.
3	175 | *6 7/8*	6 | *1/4*	8	68	34 | *1 1/4*	40	20 | *3/4*	B	12,500	1	**475.260.01**
3	175 | *6 7/8*	6 | *1/4*	6	68	34 | *1 1/4*	40	25.4 | *1*	B	12,500	1	**475.261.01**
3	200 | *8*	6 | *1/4*	8	68	46 | *1 49/64*	40	20 | *3/4*	B	12,500	1	**476.260.01**
3	200 | *8*	6 | *1/4*	6	68	46 | *1 49/64*	40	25.4 | *1*	B	12,500	1	**476.261.01**
4	250 | *10*	6 | *1/4*	3	83	42 | *1 5/8*	56	20 | *3/4*	B	10,000	1	**477.260.01**
4	250 | *10*	6 | *1/4*	3	83	42 | *1 5/8*	56	25.4 | *1*	B	10,000	1	**477.261.01**
4	300 | *12*	6 | *1/4*	3	83	67 | *2 5/8*	56	20 | *3/4*	B	10,000	1	**478.260.01**
4	300 | *12*	6 | *1/4*	3	83	67 | *2 5/8*	56	25.4 | *1*	B	10,000	1	**478.261.01**

Low sparking brushes

Low sparking brushes
are recommended for the working in areas where flammable steams, liquids or dusts are a part of the working conditions. Also, they are used in all other situations where sparks could lead to a potential fire or explosion hazard.

In explosion-proof areas, low sparking brushes are recommended. In comparison to the wooden handles of the hand brushes, the bodies of machine driven brushes are made of brass. The filling material is bronze CuSn6. These materials generate a low amount of sparks, which ensures a working environment with the minimum of sparks.

Another benefit of bronze is, its corrosion resistant properties

Typical application areas
Low sparking brushes are used in all industries and companies which have explosion risks or fire hazard due to flying sparks. e.g.:
- Oil and gas industry
- Pipeline industry
- Chemical industry
- Nuclear power plants
- Plastics industry
- Food industry, e.g.: bakeries
- And many others

For example cleaning tanks or working in an explosive environment.

Work instructions
- Low sparking brushes (with bronze filling) are a lot softer than other regularly used fill materials e.g. Steel and Stainless Steel
- Therefore these brushes have a higher abrasion rate, this means these brushes have to be used with more carefully so as not to damage the workpiece.

Item Nos. in bold are available ex stock.
Consider our minimum order value for *italic printed* article numbers (see page 152).

BRO = bronze wire

- Overuse is to be avoided.
- The use of low-sparking tools has to be not your only protection measure against fire or explosions.
- To ensure a comprehensive protection of staff and building please respect the given provisions of the different institutions, e.g.: provisions of trade associations, employers or legislators.

1 Handbrushes standard; KL 290

Rows	H	Pack.	BRO 0.20/BRO 0.40* Art.-No.
3	25	12	**108.331**
4	25	12	**108.341**
5	25	12	**108.351**
4	25	12	*108.041**

2 Handbrushes export model; KL 350

Rows	H	Pack.	BRO 0.30 Art.-No.
3	30	6	**122.771**
4	30	6	**122.821**
5	30	6	*122.871*

3 Dusters; KL320

Rows	H	Pack.	BRO 0.25 Art.-No.
4	40	12	*124.181*

4 Spark Plug Brushes; KL 200

Rows	H	Pack.	BRO 0.15 Art.-No.
3	15	12	**132.801**

5 Brooms and scrubs

Rows	KL	KB	H	Pack.	BRO 0.40 Art.-No.
6	300	70	55	12	**146.270**
6	220	60	40	12	**148.170**

Special models

	Rows	KL	KB	A	H	Pack.	BRO 0.15 crimped Art.-No.	BRO 0.08 crimped Art.-No.
6	7	150	50	140	20	12	**144.011**	
	6	180	60	170	20	12	**144.111**	
	6	150	50	130	15	12	**144.311**	
7	6	180	60	160	20	12	**144.411**	
8	11	120	70	110	14	4		**152.811**

Cup Brushes

	D	H	H1	Z	RPM max.	Cup	Pack.	BRO 0.30 crimped Art.-No.	BRO 0.50 knotted Art.-No.
9	125	30			8,000	brass wire	1	*427.661.MS*	
10	125	23	15	32	7,000	brass wire	1		*487.011.MS*

11 Wheel Brushes

D	A	EB	R	H	d. Stand	d. min./max.	RPM	Pack.	BRO 0.30 crimped Art.-No.
150	23-25	22	50	33	Set 3	13-50	6,000	1	**345.662.MS**

12 Cylinder Brushes; GL330

D	A	drilling wire	Pack.	BRO 0.20 Art.-No.
10	100	**MES 2.5**	10	**542.034**
20	100	**MES 2.5**	10	**543.006**
35	100	**MES 3.0**	10	**543.926**

GL = total length
KL = body length

BRUSHES WITH SHANK

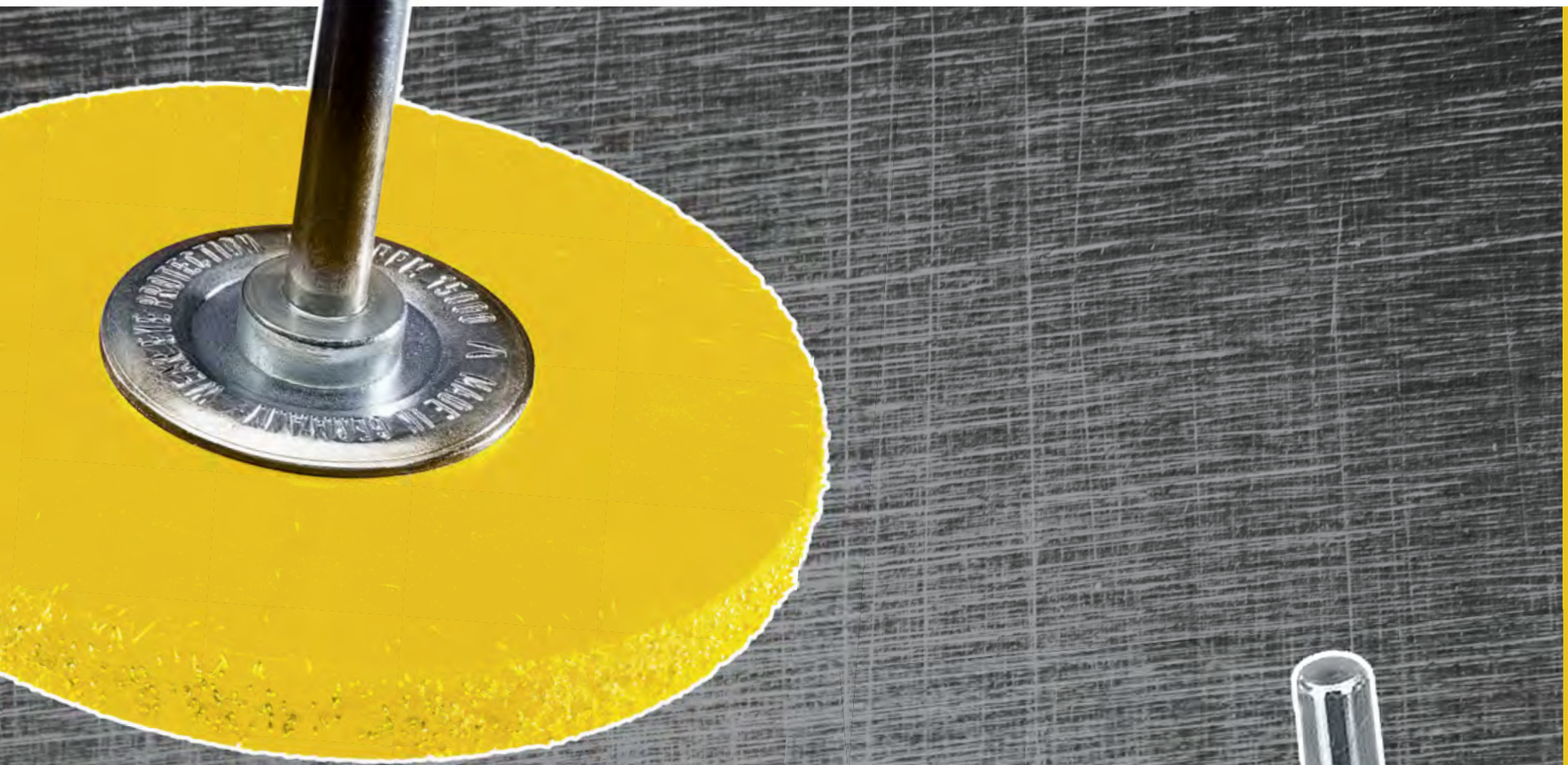

LESSMANN

Wheel Brushes with Shank

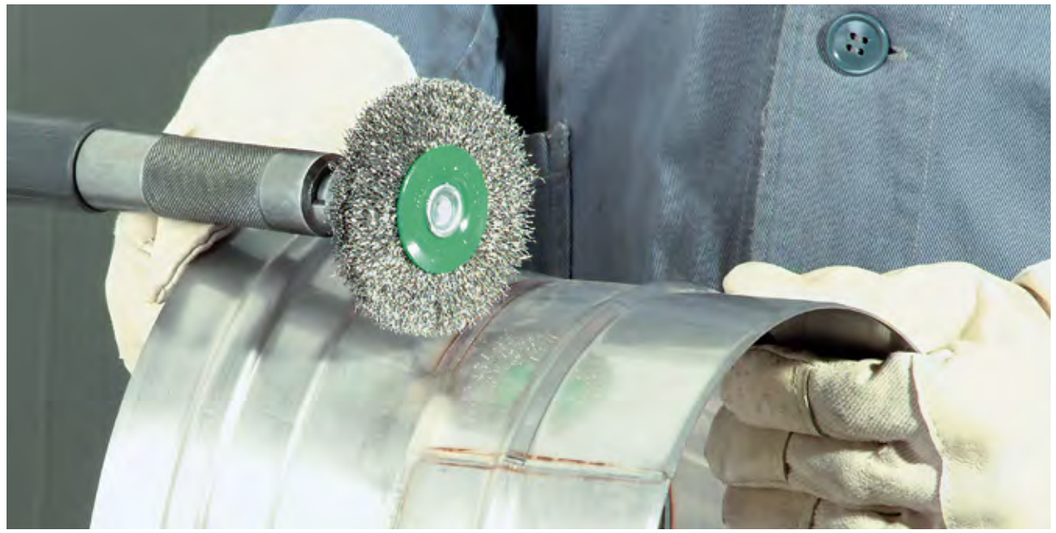

Wheel Brushes with Shank
The wheel brushes shown on these pages are manufactured with a mounted shank for professional use. Tight filling wire and balanced running make these brushes excellent tools.

Knotted Wheel Brushes with Shank
It does not matter if the brush has one or two rows, the brush is the prefect tool for removing underseal, rust deburring, roughening etc. For working in narrow places we recommend our brush 417.198.11, which is an especially narrow Brush.

Encapsulated Brushes
By embedding in tough plastic the filling width always remains the same and early break of the wires can be prevented. It's the perfect tool for long lasting and safe working. The colour on the picture can differ from the colour on the brush.

Wheel brushes with shank completely stainless steel
All the inner and outer parts of these brushes such as shanks, side plates, rings, etc. are made of stainless steel. Therefore these brushes are the perfect tool for working in damp and difficult places. These brushes do not have green side plates.

Structuring Brushes with Shank
These brushes are special brushes which can be used for wood grain surfaces.

Shank Brushes with Silicon Carbide Bristles
The high quality bristles with silicon carbide can be used for deburring, polishing and structuring of stainless steel, aluminium and plastic surfaces. Besides the articles mentioned on this page we can also supply other grits, diameters and widths.

Stainless Steel Brushes
LESSMANN brushes with stainless steel wire have green site plates. We use wire with material number 1.4310. Material number 1.4401. can be used on request.
More information for brush applications on stainless materials you will find at www.lessmann.com

The brushes have a 6 mm shank. On demand the brushes can also be supplied with 1/4" shanks (USA execution).

Brushes with other diameters, filling widths and filling material are available on request.

1 2 3

Knot Wheel Brushes with Shank Ø 6 mm

	D mm | *inch*	A mm | *inch*	H mm | *inch*	Z	R	RPM max.	Pack.	**STH 0.35** | *0.014"* Art.-No.	**STH 0.50** | *0.020"* Art.-No.	**ROH 0.50** | *0.020"* Art.-No.
1	75 | *3*	9 | *3/8*	15 | *5/8*	18	1	25,000	10		**417.198.11**	
1	75 | *3*	12 | *1/2*	15 | *5/8*	18	1	25,000	10	**417.168**	**417.198**	**417.398**
2	75 | *3*	16 | *5/8*	15 | *5/8*	18	2	25,000	10		**417.199**	**417.399**

Wheel Brushes with Shank Ø 6 mm, Encapsulated

	D mm | *inch*	A mm | *inch*	H mm | *inch*	RPM max.	Pack.	**STA 0.30** | *0.012"* Art.-No.
3	50 | *2*	8 | *5/16*	13 | *1/2*	15,000	10	**415.160**
3	60 | *2 3/8*	8 | *5/16*	18 | *3/4*	15,000	10	**416.160**
3	76 | *3*	8 | *5/16*	23 | *7/8*	15,000	10	**417.160**

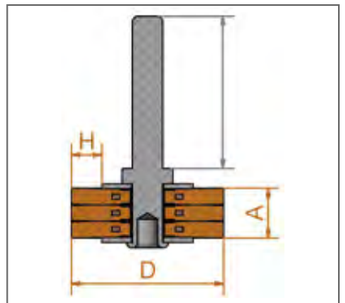

Z = number of knots, R = number of rows

Item Nos. in bold are available ex stock.
Consider our minimum order value for *italic printed* article numbers (see page 152).

STA = steel wire, crimped
STH = steel wire, high tensile, straight
ROH = stainless steel wire, high tensile

Wheel Brushes with Shank

Wheel Brushes with Shank Ø 6 mm

D mm | *inch*	A	H	RPM max.	Pack.	1 | 2 STA 0.15 | *0.006"* Art.-No.	STA 0.20 | *0.008"* Art.-No.	STA 0.30 | *0.012"* Art.-No.	STA 0.50 | *0.020"* Art.-No.	3 STM 0.25 | *0.010"* Art.-No.
20 | *3/4*	6	3	20,000	10	*411.132*	**411.142**			
30 | *1 1/4*	6	6	20,000	10	**413.132**	**413.142**	**413.162**		
30 | *1 1/4*	9	6	20,000	10	*413.133*	**413.143**	**413.163**		
40 | *1 3/8*	8	9	18,000	10	**414.132**	**414.142**	**414.162**	**414.192**	*414.752*
40 | *1 3/8*	11	9	18,000	10	*414.133*	**414.143**	**414.163**	*414.193*	available on demand
50 | *2*	10	12	15,000	10	*415.132*	**415.142**	**415.162**	**415.192**	**415.752**
50 | *2*	14	12	15,000	10	**415.133**	**415.143**	**415.163**	*415.193*	*415.753*
60 | *2 3/8*	10	17	15,000	10	*416.132*	**416.142**	**416.162**	available on demand	*416.752*
60 | *2 3/8*	14	17	15,000	10	**416.133**	**416.143**	**416.163**	*416.193*	available on demand
70 | *2 3/4*	12	19	15,000	10	*417.132*	**417.142**	**417.162**	**417.192**	**417.752**
70 | *2 3/4*	16	19	15,000	10	**417.133**	**417.143**	**417.163**	available on demand	available on demand
80 | *3 1/4*	12	20	15,000	10	available on demand	**418.142**	**418.162**	*418.192*	*418.752*
80 | *3 1/4*	18	20	15,000	10	available on demand	**418.143**	**418.163**	available on demand	available on demand
70 | *2 3/4*	10	14	15,000	10				**417.196***	

Structuring Brushes with Shank Ø 8 mm

D mm | *inch*	A	H	RPM max.	Pack.	4 STM 0.25 | *0.010"* Art.-No.	SIC 80/1.4 Art.-No.
80 | *3 1/4*	35	28	4,000	1	**418.704**	*418.803*

* larger plates

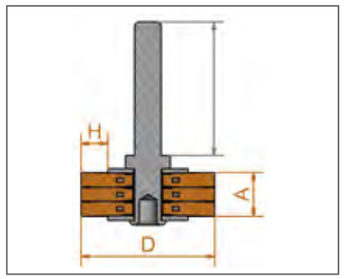

Item Nos. in bold are available ex stock.
Consider our minimum order value for *italic printed* article numbers (see page 152).

STA	= steel wire, crimped
STM	= brass coated steel, crimped
ROF	= stainless steel wire, crimped
RO4	= stainless steel wire, straight, 1.4401
MES	= brass wire, crimped
SIC	= silicon carbide bristles

Wheel Brushes with Shank Ø 6 mm, Stainless Steel and Brass Wire

D mm | *inch*	A mm | *inch*	H mm | *inch*	RPM max.	Pack.	1 ROF 0.20 | *0.008"* Art.-No.	ROF 0.30 | *0.012"* Art.-No.	RO4 0.30 | *0.012"* Art.-No.	2 MES 0.20 | *0.008"* Art.-No.
20 | *3/4*	6 | *1/4*	3 | *1/8*	20,000	10	**411.342**			**411.542**
30 | *1 1/4*	6 | *1/4*	6 | *1/4*	20,000	10	**413.342**	*413.362*		**413.542**
30 | *1 1/4*	9 | *3/8*	6 | *1/4*	20,000	10	**413.343**	*413.363*		*413.543*
40 | *1 3/8*	8 | *5/16*	9 | *3/8*	18,000	10	**414.342**	**414.362**	**414.462**	**414.542**
40 | *1 3/8*	11 | *4/9*	9 | *3/8*	18,000	10	**414.343**	available on demand		*414.543*
50 | *2*	10 | *3/8*	12 | *1/2*	15,000	10	**415.342**	**415.362**	**415.462**	**415.542**
50 | *2*	14 | *9/16*	12 | *1/2*	15,000	10	**415.343**	**415.363**		**415.543**
60 | *2 3/8*	10 | *3/8*	17 | *5/8*	15,000	10	**416.342**	**416.362**	**416.462**	**416.542**
60 | *2 3/8*	14 | *9/16*	17 | *5/8*	15,000	10	**416.343**	**416.363**		**416.543**
70 | *2 3/4*	12 | *1/2*	19 | *3/4*	15,000	10	**417.342**	**417.362**	**417.462**	**417.542**
70 | *2 3/4*	16 | *5/8*	19 | *3/4*	15,000	10	**417.343**	**417.363**		**417.543**
80 | *3 1/4*	12 | *1/2*	20 | *3/4*	15,000	10	**418.342**	**418.362**	**418.462**	**418.542**
80 | *3 1/4*	18 | *3/4*	20 | *3/4*	15,000	10	**418.343**	**418.363**		**418.543**

3 Wheel Brushes with Shank Ø 6 mm, Completely Stainless

D mm | *inch*	A mm | *inch*	H mm | *inch*	RPM max.	Pack.	ROF 0.20 | *0.008"* Art.-No.	ROF 0.30 | *0.012"* Art.-No.
50 | *2*	15 | *5/8*	12 | *1/2*	15,000	10	**415.301**	**415.302**
60 | *2 3/8*	17 | *5/8*	17 | *5/8*	15,000	10	**416.303**	*416.302*
70 | *2 3/4*	18 | *3/4*	19 | *3/4*	15,000	10	**417.306**	**417.309**

4 Wheel Brushes with Shank Ø 6 mm, Silicon Carbide Bristles

D mm | *inch*	A mm | *inch*	H mm | *inch*	RPM max.	Pack.	SIC 120/0.6 Art.-No.	SIC 120/1.1 Art.-No.	SIC 180/1.0 Art.-No.	SIC 320/0.6 Art.-No.
30 | *1 1/4*	6 | *1/4*	6 | *1/4*	18,000	10	**413.841**			**413.871**
40 | *1 3/8*	10 | *3/8*	12 | *1/2*	15,000	10		**414.842**		**414.872**
50 | *2*	10 | *3/8*	12 | *1/2*	15,000	10		**415.842**	*415.852*	**415.872**
70 | *2 3/4*	12 | *1/2*	20 | *3/4*	15,000	10		**417.842**	**417.852**	**417.872**
80 | *3 1/4*	14 | *9/16*	22 | *7/8*	15,000	10		**418.842**	*418.852*	**418.872**

Cup Shank Brushes

Cup Brushes with Shank
Ideal for working on medium and large areas.

Cup Shank Brushes with Plastic Cup
Cup Shank Brushes with Plastic Cup and stainless steel wire especially are used for applications on stainless steel materials.
The plastic cup prevents contact with the working piece, therefore it protects from corrosion or other foreign particles.

Bevel Brushes with Shank
Due to the conical form these universal tools are ideal for notches, corners, grooves, inside edges and irregular surfaces. These professional brushes are suitable for drills and cordless screwdrivers as well for high-speed straight grinders and compressed-air drives.

Brushes with steel and stainless steel wire can be used at higher RPM and can therefore be used on electrical and air driven grinding machines. These models are known for their high density of filling material and therefore they have a very long lifetime.

The brushes with silicon carbide bristles can be used for deburring, polishing or structuring of stainless steel, aluminium and plastic surfaces.

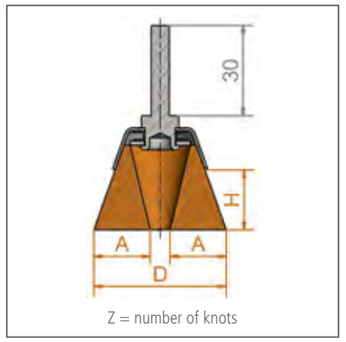

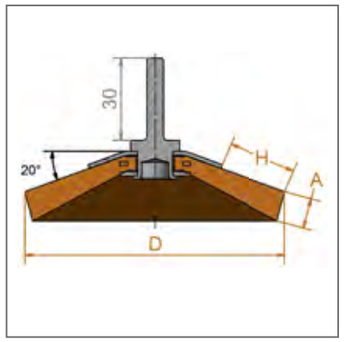

Item Nos. in bold are available ex stock.
Consider our minimum order value for *italic printed* article numbers (see page 152).

STA	= steel wire, crimped
STH	= steel wire, high tensile, straight
ROF	= stainless steel wire, crimped
MES	= brass wire, crimped
SIC	= silicon carbide bristles

Cup Brushes with Shank Ø 6 mm

D	A	H	RPM	Pack.	1 STA 0.20 | *0.008"*	1 STA 0.30 | *0.012"*	1 ROF 0.20 | *0.008"*	1 ROF 0.30 | *0.012"*	2 MES 0.20 | *0.008"*	2 MES 0.30 | *0.012"*
mm | *inch*	mm | *inch*	mm | *inch*	max.		Art.-No.	Art.-No.	Art.-No.	Art.-No.	Art.-No.	Art.-No.
40 | *1 3/8*	15 | *5/8*	20 | *3/4*	10,500	10	**434.142**	**434.162**	*434.342*	**434.362**	**434.542**	
50 | *2*	22 | *7/8*	20 | *3/4*	10,500	10	**435.142**	**435.162**	*435.342*	**435.362**	**435.542**	**435.562**
60 | *2 3/8*	25 | *1*	25 | *1*	8,000	10	available on demand	**436.162**	available on demand	**436.362**	available on demand	
70 | *2 3/4*	30 | *1 1/4*	25 | *1*	6,000	10	**437.142**	**437.162**	*437.342*	**437.362**	**437.542**	

3 Cup Brushes with Shank Ø 6 mm and plastic cup

D	A	H	RPM	Pack.	ROF 0.20 | *0.008"*	ROF 0.25 | *0.010"*	ROF 0.30 | *0.012"*
mm | *inch*	mm | *inch*	mm | *inch*	max.		Art.-No.	Art.-No.	Art.-No.
40 | *1 3/8*	20 | *3/4*	30 | *1 1/4*	15,000	10	**434.345**	**434.355**	**434.365**
50 | *2*	25 | *1*	28 | *1*	10,500	10	**435.345**	**435.355**	**435.365**

4 Cup Brushes with Shank Ø 6 mm, Silicon Carbide Bristles

D	A	H	RPM	Pack.	SIC 80/1.2	SIC 320/0.6
mm | *inch*	mm | *inch*	mm | *inch*	max.		Art.-No.	Art.-No.
50 | *2*	10 | *3/8*	20 | *3/4*	4,500	10	**430.128**	**430.129**
75 | *3*	15 | *5/8*	22 | *7/8*	4,500	10	**430.138**	**430.139**

5 Knot End Brushes with Shank Ø 6 mm, Steel Wire

D	H	Z	RPM	Pack.	STH 0.50 | *0.020"*
mm | *inch*	mm | *inch*	mm | *inch*	max.		Art.-No.
75 | *3*	20 | *3/4*	18 | *3/4*	4,500	10	**483.230**

6 Knot Bevel Brushes with Shank Ø 6 mm

D	A	H	RPM	Pack.	STA 0.30	ROF 0.30
mm | *inch*	mm | *inch*	mm | *inch*	max.		Art.-No.	Art.-No.
70 | *2 3/4*	12 | *1/2*	15 | *5/8*	15,000	10	**4K7.161**	**4K7.361**
90 | *3 3/4*	12 | *1/2*	25 | *1*	12,000	10	**4K9.161**	**4K9.361**

End Brushes

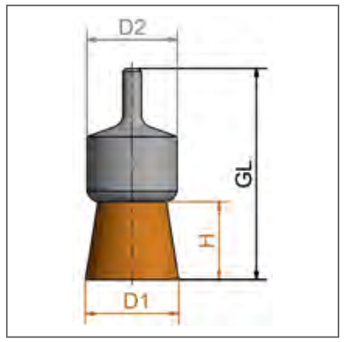

Item Nos. in bold are available ex stock.
Consider our minimum order value for *italic printed* article numbers (see page 152).

STA	= steel wire, crimped
STH	= steel wire, high tensile, straight
ROF	= stainless steel wire, crimped
SIC	= silicon carbide bristles

End Brushes with Shank
For cleaning and deburring in hard to reach areas, removal of paint, rubber excess, cleaning of moulds and castings. Also for working on edges and curves, and in the inside of the bores, etc. End brushes are also available in other shapes, spreaded or pointed.

These brushes are perfect for fast moving tools. On demand also with 1/4" shank available.

Special End Brushes, crimping
The special end brushes with narrow crimped wire are characterized by its dense filling. These brushes show a harder brushing effect than brushes with normal crimped wire. These brushes are also available with extra long shanks or different diameters.

Square End Brushes
This special tool enables e. g. cleaning of blind holes and processing of bottom and side surfaces in one step.
It's perfect for cleaning and easy deburring applications, e. g. square bores. Other diameters available on demand.

Encapsulated Brushes
By embedding in tough plastic the filling width always remains the same and early break of the wires can be prevented. It's the perfect tool for long lasting and safe working. The advantages when working with encapsulated brushes are longer lifetime and harder brush effect. However, it might be possible that the brush will leave marks on the work piece.

Stainlessless Steel Brushes
Further information for brushing on stainless steel you will find on www.lessmann.com

Special Design
For your order please state your requirements regarding the measures and wires.

Special End Brushes with Shank Ø 6 mm, narrow crimping

	D1 mm | *inch*	D2 mm | *inch*	H mm | *inch*	GL mm | *inch*	RPM max.	Pack.	**STH 0.35** | *0.014"* Art.-No.	**STH 0.50** | *0.020"* Art.-No.
1	11 | *7/16*	12 | *1/2*	25 | *1*	71 | *2 3/4*	12,000	10	**466.171**	available on demand
2	11 | *7/16*	12 | *1/2*	25 | *1*	71 | *2 3/4*	12,000	10	**466.172***	available on demand*
1	19 | *3/4*	22 | *7/8*	29 | *1 1/8*	72 | *2 3/4*	12,000	10	*460.121*	available on demand
2	19 | *3/4*	22 | *7/8*	29 | *1 1/8*	72 | *2 3/4*	12,000	10	*460.122**	available on demand*

3 Square End Brushes with Shank Ø 6 mm

D1 mm | *inch*	A mm | *inch*	GL mm | *inch*	RPM max.	Pack.	**STA 0.15** | *0.006"* Art.-No.	**STA 0.25** | *0.010"* Art.-No.	**ROF 0.30** | *0.012"* Art.-No.
25.4 | *1*	8 | *5/16*	100 | *4*	4,500	10	*469.131*	*469.151*	*469.362*
31.8 | *1 1/4*	8 | *5/16*	100 | *4*	4,500	10	*469.133*	*469.153*	available on demand
38.1 | *1 1/2*	8 | *5/16*	100 | *4*	4,500	10	available on demand	available on demand	available on demand
50.8 | *2*	8 | *5/16*	100 | *4*	4,500	10	available on demand	available on demand	available on demand

4 End Brushes with Shank Ø 6 mm, Encapsulated

D1 mm | *inch*	D2 mm | *inch*	H mm | *inch*	GL mm | *inch*	RPM max.	Pack.	**STA 0.30** | *0.012"* Art.-No.
10 | *3/8*	10 | *3/8*	20 | *3/4*	65 | *2 1/2*	15,000	10	**451.160**
16 | *5/8*	16 | *5/8*	25 | *1*	72 | *2 7/8*	15,000	10	**452.160**
22 | *7/8*	22 | *7/8*	25 | *1*	72 | *2 7/8*	15,000	10	**453.160**
28 | *1 1/8*	28 | *1 7/64*	30 | *1 1/4*	75 | *3*	10,000	10	**456.160**

5 End Brushes with Shank Ø 6 mm, Silicon Carbide Bristles

D1 mm | *inch*	D2 mm | *inch*	H mm | *inch*	GL mm | *inch*	RPM max.	Pack.	**SIC 120/1.1** Art.-No.	**SIC 180/1.0** Art.-No.	**SIC 320/0.6** Art.-No.
12 | *1/2*	10 | *3/8*	20 | *3/4*	60 | *2 3/8*	20,000	10	**451.831**	*451.851*	*451.871*
17 | *5/8*	16 | *5/8*	22 | *7/8*	68 | *2 3/4*	20,000	10	**452.831**	*452.851*	available on demand
23 | *7/8*	22 | *7/8*	25 | *1*	70 | *2 3/4*	10,000	10	*454.831*	**454.851**	**454.871**
30 | *1 1/4*	28 | *1*	30 | *1 1/4*	75 | *3*	10,000	10	*456.831*	**456.851**	**456.871**

* pointed

End Brushes

End Brushes with Shank Ø 6 mm, Steel Wire

	D1 mm | *inch*	D2 mm | *inch*	H mm | *inch*	GL mm | *inch*	RPM max.	Pack.	Shape	**STA 0.15** | *0.006"* Art.-No.	**STA 0.20** | *0.008"* Art.-No.	**STA 0.30** | *0.012"* Art.-No.	**STA 0.50** | *0.020"* Art.-No.
1	12 | *1/2*	10 | *3/8*	20 | *3/4*	60 | *2 3/8*	20,000	10		**451.131**	**451.141**	**451.161**	**451.191**
2	12 | *1/2*	10 | *3/8*	20 | *3/4*	60 | *2 3/8*	20,000	10				**451.162***	*451.192**
3	12 | *1/2*	10 | *3/8*	20 | *3/4*	120 | *4 3/4*	15,000	10		**458.131**	**458.141**	**458.161**	**458.191**
4	17 | *5/8*	16 | *5/8*	22 | *7/8*	65 | *2 1/2*	20,000	10		*452.131*	**452.141**	**452.161**	**452.191**
5	23 | *7/8*	22 | *7/8*	25 | *1*	68 | *2 3/4*	18,000	10		**453.131**	**453.141**	**453.161**	**453.191**
	30 | *1 1/4*	29 | *1 1/8*	25 | *1*	68 | *2 3/4*	18,000	10		**456.131**	**456.141**	**456.161**	**456.191**
	50 | *2*	22 | *7/8*	18 | *3/4*	68 | *2 3/4*	18,000	10				**453.163****	
6	70 | *2 3/4*	29 | *1 1/8*	25 | *1*	68 | *2 3/4*	18,000	10				**456.163****	

9 End Brushes with Shank Ø 6 mm, Steel Wire high tensile, dense version, longer lifetime

D1 mm | *inch*	D2 mm | *inch*	H mm | *inch*	GL mm | *inch*	RPM max.	Pack.	Shape	**STH 0.30** | *0.012"* Art.-No.
12 | *1/2*	12 | *1/2*	20 | *3/4*	66 | *2 1/2*	20,000	10		**451.261.BD**
17 | *5/8*	16 | *5/8*	22 | *7/8*	65 | *2 1/2*	20,000	10		**452.261.BD**
23 | *7/8*	22 | *7/8*	25 | *1*	68 | *2 3/4*	18,000	10		**453.261.BD**
30 | *1 1/4*	29 | *1 1/8*	25 | *1*	68 | *2 3/4*	18,000	10		**456.261.BD**

End Brushes with Shank Ø 6 mm, Brassed Steel Wire, Cord Wire

D1 mm | *inch*	D2 mm | *inch*	H mm | *inch*	GL mm | *inch*	RPM max.	Pack.	Shape	7 **STM 0.25** | *0.010"* Art.-No.	8 **STL 0.175** | *0.007"* Art.-No.	8 **STL 0.22** | *0.009"* Art.-No.
17 | *5/8*	16 | *5/8*	22 | *7/8*	65 | *2 1/2*	20,000	10		**452.751**	*452.703*	*452.705*
23 | *7/8*	22 | *7/8*	25 | *1*	68 | *2 3/4*	18,000	10		**453.751**	*453.703*	*453.705*
30 | *1 1/4*	29 | *1 1/8*	25 | *1*	68 | *2 3/4*	18,000	10		*456.751*	*456.703*	*456.705*

End Brushes with Shank Ø 6 mm, Stainless Steel and Brass Wire

	D1 mm | *inch*	D2 mm | *inch*	H	GL	RPM max.	Pack.	Shape	**ROF 0.20** | *0.008"* Art.-No.	**ROF 0.30** | *0.012"* Art.-No.	7 **MES 0.20** | *0.008"* Art.-No.	7 **MES 0.30** | *0.012"* Art.-No.
1	12 | *1/2*	10 | *3/8*	20	60	20,000	10		**451.341**	**451.361**	**451.541**	**451.561**
2	12 | *1/2*	10 | *3/8*	20	60	20,000	10			**451.362**	*451.542*	*451.562*
3	12 | *1/2*	10 | *3/8*	20	120	15,000	10		**458.341**	**458.361**	**458.541**	**458.561**
4	17 | *5/8*	16 | *5/8*	22	65	20,000	10		**452.341**	**452.361**	**452.541**	**452.561**
	23 | *7/8*	22 | *7/8*	25	68	18,000	10		**453.341**	**453.361**	**453.541**	**453.561**
5	30 | *1 1/4*	29 | *1 1/8*	25	68	18,000	10		**456.341**	**456.361**	**456.541**	**456.561**
6	50 | *2*	22 | *7/8*	18	68	18,000	10			**453.363**		

End Brushes with Shank Ø 6 mm, complete Stainless Steel

D1 mm | *inch*	D2 mm | *inch*	H	GL	RPM max.	Pack.	Shape	**ROF 0.30** | *0.012"* Art.-No.
12 | *1/2*	10 | *3/8*	20	60	20,000	10		**451.305**
17 | *5/8*	16 | *5/8*	22	65	20,000	10		**452.304**
23 | *7/8*	22 | *7/8*	25	68	18,000	10		**453.301**

Brushes also available with plastic cover.

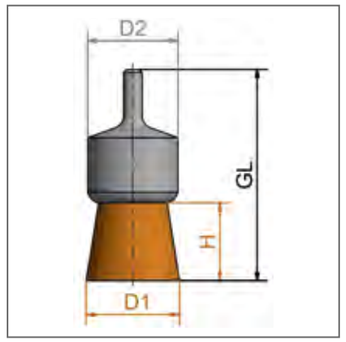

Item Nos. in bold are available ex stock.
Consider our minimum order value for *italic printed* article numbers (see page 152).

STA = steel wire, crimped
STH = steel wire, high tensile, crimped
STM = brass coated steel, crimped
STL = cord wire, crimped
ROF = stainless steel wire, crimped
MES = brass wire, crimped

Knot End Brushes

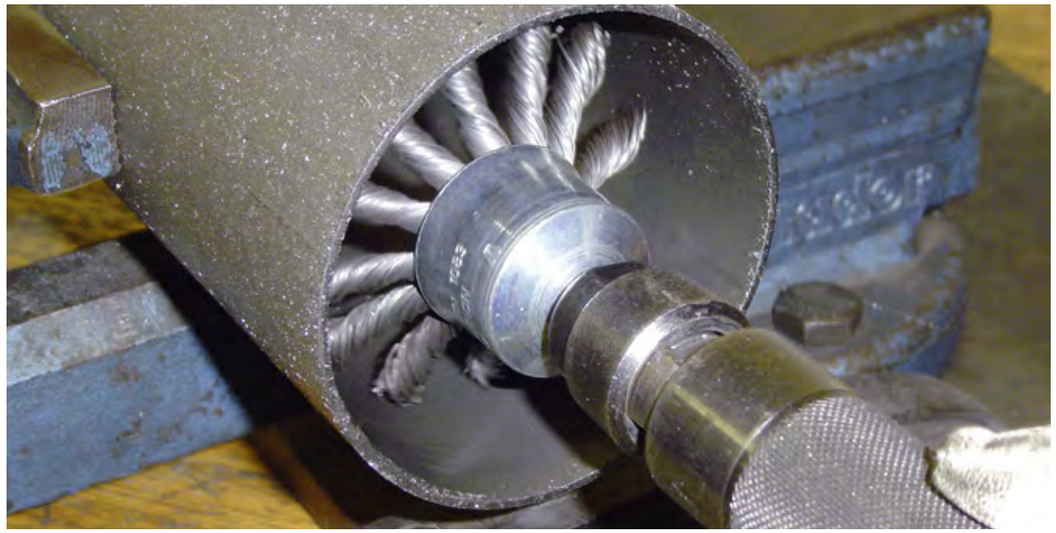

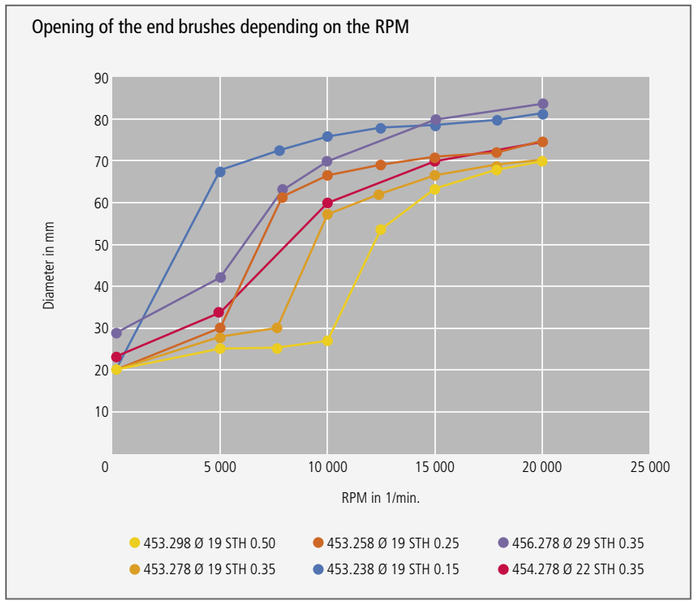

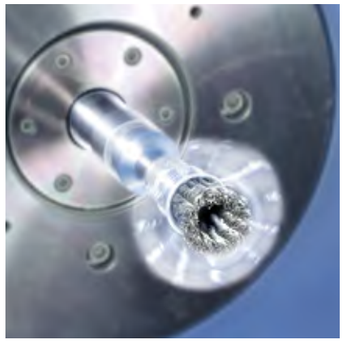

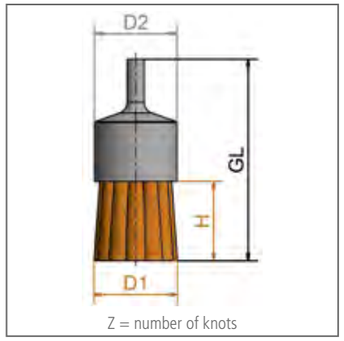

Knotted End Brushes with Shank
According to the RPM the brush will vary in dimension and enable the user to work in hard to reach areas such as drilled holes and recesses of all kinds.
The cups of the knot end brushes with stainless steel wire are **coated with plastic** to protect the stainless surface. Knotted end brushes with stainless steel wire are green characterized.

Further information on working on stainless steel you find at www.lessmann.com

Special End Brushes with Shank 6 Ø, one Knot
One-knotted End Brushes to render precise working possible.

End Brushes, filled with epoxy resin
End Brushes filled with epoxy resin are able to treat small, defined areas. The brushes are more aggressive and allow a precise handling, hence they are used e.g. for electrical cabinets or for treating mounting surfaces.

Item Nos. in bold are available ex stock.
Consider our minimum order value for *italic printed* article numbers (see page 152).

STH = steel wire, high tensile, straight
STM = brass coated steel, crimped
RO4 = stainless steel wire, straight, 1.4401

Knot End Brushes with Shank Ø 6 mm, Steel Wire

	D1/D2 mm | *inch*	GL mm | *inch*	H mm | *inch*	Z	ZF	RPM max.	Pack.	STH 0.15 | *0.006"* Art.-No.	STH 0.25 | *0.010"* Art.-No.	STH 0.35 | *0.014"* Art.-No.	STH 0.50 | *0.020"* Art.-No.
1	6/10 | *1/4/3/8*	65 | *2 1/2*	25 | *1*	1	D	4,500	10	available on demand	**451.258**	**451.278**	available on demand
2	19 | *3/4*	72 | *2 7/8*	28 | *1*	6	B	20,000	10		**453.258**	**453.278**	**453.298**
3	22 | *7/8*	72 | *2 7/8*	28 | *1*	8	B	20,000	10	*454.238*	**454.258**	**454.278**	**454.298**
4	29 | *1 1/8*	72 | *2 7/8*	28 | *1*	12	B	20,000	10	available on demand	**456.258**	**456.278**	**456.298**
5	19 | *3/4*	72 | *2 7/8*	28 | *1*	4	B	20,000	50	available on demand	available on demand	**452.278.GH***	available on demand

6 Knot End Brushes with Shank Ø 6 mm, Brass coated steel wire

D1/D2 mm | *inch*	GL mm | *inch*	H mm | *inch*	Z	ZF	RPM max.	Pack.	STM 0.25 | *0.010"* Art.-No.	STM 0.35 | *0.014"* Art.-No.
19 | *3/4*	72 | *2 7/8*	28 | *1*	6	D	20,000	10	**453.758**	**453.778**
22 | *7/8*	72 | *2 7/8*	28 | *1*	8	D	20,000	10	**454.758**	*454.778*
29 | *1 1/8*	72 | *2 7/8*	28 | *1*	12	D	20,000	10	**456.758**	*456.778*

7 Knot End Brushes with Shank Ø 6 mm, Stainless Steel Wire

D1/D2 mm | *inch*	GL mm | *inch*	H mm | *inch*	Z	ZF	RPM max.	Pack.	RO4 0.15 | *0.006"* Art.-No.	RO4 0.25 | *0.010"* Art.-No.	RO4 0.35 | *0.014"* Art.-No.	RO4 0.50 | *0.020"* Art.-No.
6/10 | *1/4/3/8*	65 | *2 1/2*	25 | *1*	1	D	4,500	10	available on demand	**451.458**	**451.478**	available on demand
19 | *3/4*	72 | *2 7/8*	28 | *1*	6	B	20,000	10	**453.338**	**453.358**	**453.378**	*453.398*
22 | *7/8*	72 | *2 7/8*	28 | *1*	8	B	20,000	10	*454.338*	**454.358**	**454.378**	**454.398**
29 | *1 1/8*	72 | *2 7/8*	28 | *1*	12	B	20,000	10	*456.338*	**456.358**	**456.378**	**456.398**

* filled with epoxy resin

Knot types ZF

B: Rose Bud
D: Fully knotted
(wire ends are cut completely)

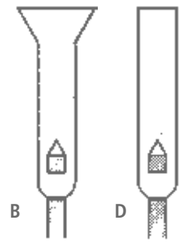

Miniature Brushes

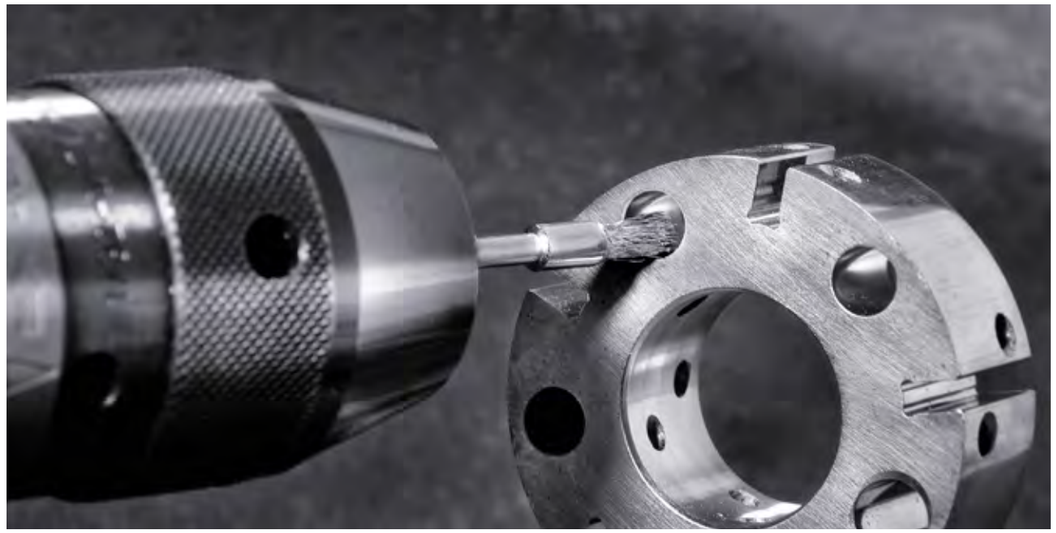

Miniature Brushes
Miniature Brushes are used for polishing, cleaning, or deburring of small-area surfaces or small working pieces. Miniature brushes remove waste and scale from weld seams or soldering points. The brushes are used on metal surfaces, steel, aluminum, cast iron, plastics, stone or wood.

Typical fields of applications:
- Precision tools
- Fine mechanics
- Pneumatic and hydraulics
- Electronics parts, e.g. plates

Miniature Brushes are available in different types as wheel, cup and end brushes.
The typical filling materials are steel wire, stainless steel wire, brass wire or abrasive bristles.

Stainless Steel Brushes
Information on working on stainless steel you find at www.lessmann.com

Please Note: Brushes with bristles or goat hair achieve an ideal brushing result by using polish.

Item Nos. in bold are available ex stock.
Consider our minimum order value for *italic printed* article numbers (see page 152).

STH	= steel wire, high tensile, straight
ROF	= stainless steel wire, crimped
MES	= brass wire, crimped
PA	= polyamide
SIC	= silicon carbide bristles
AO	= aluminium oxide bristles

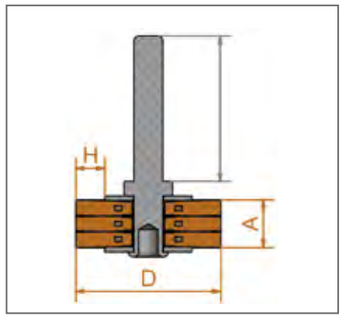

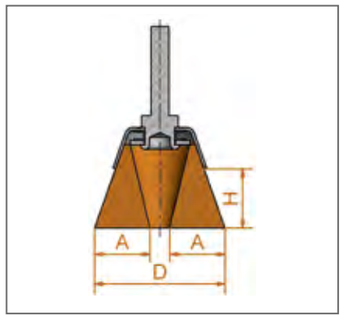

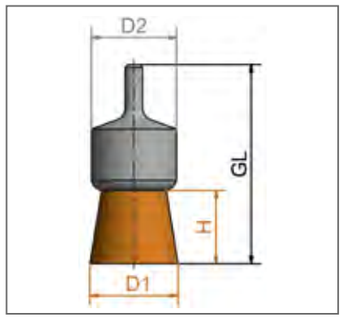

BRUSHES WITH SHANK

1 Miniature Wheel Brushes with shank Ø 3 mm

D mm | *inch*	A	H	RPM max.	Pack.	STH 0.10 Art.-No.	ROF 0.10 Art.-No.	MES 0.10 Art.-No.	SIC 320/0.55 Art.-No.	SIC 500/0.46 Art.-No.	SIC 800/0.25 Art.-No.	AO 320/0.50 Art.-No.
16 | *5/8*	2	3	15,000	10	**410.221**	**410.321**	*410.521*	*410.871*	*410.881*	*410.891*	*410.871.AO*
19 | *3/4*	2	5	12,000	10	**410.222**	**410.322**	**410.522**	*410.872*	*410.882*	*410.892*	*410.872.AO*
22 | *7/8*	2	6	10,000	10	**410.223**	**410.323**	**410.523**	*410.873*	**410.883**	*410.893*	*410.873.AO*

D mm | *inch*	A	H	RPM max.	Pack.	AO 500/0.46 Art.-No.	AO 600/0.30 Art.-No.	Diamond K400 Art.-No.	PA 0.15 Art.-No.	Bristle white Art.-No.	Bristle schwarz Art.-No.	Goat hair Art.-No.
16 | *5/8*	2	3	15,000	10	*410.801*	*410.891.AO*	*410.811.DB*	*410.031*	*410.001.WB*	*410.001.SB*	*410.001.ZH*
19 | *3/4*	2	5	12,000	10	*410.802*	*410.892.AO*	*410.812.DB*	*410.032*	*410.002.WB*	*410.002.SB*	*410.002.ZH*
22 | *7/8*	2	6	10,000	10	*410.803*	*410.893.AO*	*410.813.DB*	**410.033**	**410.003.WB**	**410.003.SB**	**410.003.ZH**

2 Miniature Cup Brushes with shank Ø 3 mm

D mm | *inch*	A	H	RPM max.	Pack.	STH 0.10 Art.-No.	ROF 0.10 Art.-No.	MES 0.10 Art.-No.	SIC 320/0.55 Art.-No.	SIC 500/0.46 Art.-No.	SIC 800/0.25 Art.-No.	AO 320/0.50 Art.-No.
15 | *5/8*	2	5	15,000	10	**430.222**	**430.322**	**430.522**	*430.872*	*430.882*	*430.092*	*430.872.AO*
18 | *3/4*	2	6	15,000	10	**430.223**	**430.323**	**430.523**	*430.873*	**430.883**	*430.893*	*430.873.AO*

D mm | *inch*	A	H	RPM max.	Pack.	AO 500/0.46 Art.-No.	AO 600/0.30 Art.-No.	Diamond K400 Art.-No.	PA 0.15 Art.-No.	Bristle white Art.-No.	Bristle schwarz Art.-No.	Goat hair Art.-No.
15 | *5/8*	2	5	15,000	10	*430.802*	*430.892.AO*	*430.812.DB*	**430.031**	**430.001.WB**	**430.001.SB**	**430.001.ZH**
18 | *3/4*	2	6	15,000	10	*430.803*	*430.893.AO*	*430.813.DB*	*430.032*	*430.002.WB*	*430.002.SB*	*430.002.ZH*

3 Miniature End Brushes with shank Ø 3 mm

D1 mm | *inch*	H	RPM max.	Pack.	STH 0.10 Art.-No.	ROF 0.10 Art.-No.	MES 0.10 Art.-No.	SIC 320/0.55 Art.-No.	SIC 500/0.46 Art.-No.	SIC 800/0.25 Art.-No.	AO 320/0.50 Art.-No.
5 | *13/64*	8	15,000	10	**450.221**	**450.311**	**450.521**	*450.871*	**450.881**	*450.891*	*450.871.AO*

D1 mm | *inch*	H	RPM max.	Pack.	AO 500/0.46 Art.-No.	AO 600/0.30 Art.-No.	Diamond K400 Art.-No.	PA 0.15 Art.-No.	Bristle white Art.-No.	Bristle schwarz Art.-No.	Goat hair Art.-No.
5 | *13/64*	8	15,000	10	*450.801*	*450.891.AO*	*450.821.DB*	**450.031**	**450.001.WB**	**450.001.SB**	**450.001.ZH**

All Brushes also available with shank Ø 2,34 and 3,17 mm.

ROKI
LESSMANN

Hand Brushes

Hand Brushes
Hand Brushes are used everywhere, in the metal industry, construction work, in the workshop. They are found in every tool box. The complete range contains all types of filling materials, from coarse steel to the finest brass wire. The handles are made of beech wood with two hanging holes.

LESSMANN Handbrushes are of superb quality and yet are economic due to a fully automated and efficient production facility. Using modern marking systems individual printing of brands and EAN Bar Codes can be made. This is done by burning stamps or tampon printing at low cost.

Brake Caliper Brushes ROKI
This brush has been manufactured in co-operation with the automobile industry. This brush is used for cleaning off clogged lining deposits when changing brake pad linings. Thus the brush is very slim with a heavy straight wire filling. Made in this way it prevents damage to sensitive brake areas during use. The brush 182.431 has to the top a sloping filling and is therefore extra hard. New is the two-components-handle with the latest ergonomical aspects. Because of the design and the ergonomic handle this brush is remarkably versatile to use.

Hand Brushes with Two-Components Handles
apply to other requirements of modern high quality tools with best ergonomics.

Rivet Brushes
The V shaped filling material enables the removal of slag and scale from normally hard to reach welds and fillet welds

Hand Brushes with Scraper
For painters and bricklayers in the construction industry. These brushes are ideal for scraping off dirt or cement splashes.

Hand Brushes, Heavy Duty
These models have a larger wooden handle and a longer and dense wire filling than our standard models.

Universal Wire Brushes
For many uses, especially in the Do It Yourself section.

Stainless Steel Brushes
Information on brushing on stainless materials you will find at www.lessmann.com

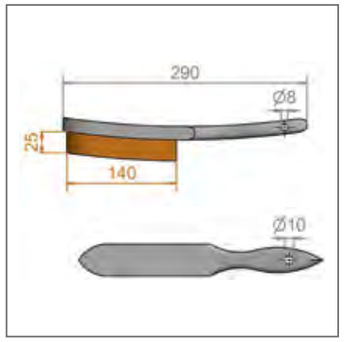

All standard hand brushes have a bar code stamp and LESSMANN-imprint.

Promoting sustainable forest management www.pefc.de

PEFC/04-31-0389

Hand Brushes Standard

EAN

Hand Brushes

	Rows >		1	2	3	4	5	6
	Filling	Pack.	Art.-No.	Art.-No.	Art.-No.	Art.-No.	Art.-No.	Art.-No.
1	**STA** straight 0.35 | *0.014"*	12	**100.011**	**100.021**	**100.031**	**100.041**	**100.051**	**100.061**
1	**STA** straight 0.35 | *0.014"*	100		**100.020**	**100.030**	**100.040**	**100.050**	
1	**STM** crimped 0.30 | *0.012"*	12		**105.421**	**105.431**	**105.441**	**105.451**	**105.461**
1	**STA** crimped 0.20 | *0.008"*	12			**102.431**	**102.441**		
1	**STA** crimped 0.30 | *0.012"*	12	**102.611**	**102.621**	**102.631**	**102.641**	**102.651**	**102.661**
2	**ROF** crimped 0.15 | *0.006"*	12		**104.321**	**104.331**	**104.341**	**104.351**	
2	**ROF** crimped 0.20 | *0.008"*	12		**104.421**	**104.431**	**104.441**	**104.451**	
2	**ROF** crimped 0.35 | *0.012"*	12	**104.611**	**104.621**	**104.631**	**104.641**	**104.651**	**104.661**
2	**ROF** straight 0.35 | *0.012"*	12	**103.711**	**103.721**	**103.731**	**103.741**	**103.751**	**103.761**
2	**RO8** straight 0.30 | *0.012"*	12		**105.721**	**105.731**	**105.741**		
3	**MES** crimped 0.15 | *0.006"*	12		**107.321**	**107.331**	**107.341**	**107.351**	
3	**MES** crimped 0.25 | *0.010"*	12	*107.411*	**107.421**	**107.431**	**107.441**	**107.451**	**107.461**
3	**MES** crimped 0.35 | *0.014"*	12	*107.611*	**107.621**	**107.631**	**107.641**	**107.651**	**107.661**
3	**MES** straight 0.35 | *0.014"*	12		**106.621**	**106.631**	**106.641**	**106.651**	
	BRO crimped 0.20 | *0.008"*	12			*108.331*	**108.341**	**108.351**	
	PA straight 0.40 | *0.016"*	12			**109.431**	**109.441**	**109.451**	
4	**FIB**	12				**109.741**		

Other filling materials and trim length on request.

Other sparkless brushes can be found on page 64

Item Nos. in bold are available ex stock.
Consider our minimum order value for *italic printed* article numbers (see page 152).

STA = steel wire
STM = brass coated steel
ROF = stainless steel wire
RO8 = stainless steel wire, extremely heat resistant
MES = brass wire
BRO = bronze wire
PA = polyamide
FIB = fibre

Special Hand Brushes

1 2 3 4 6 5

Special Hand Brushes

	Filling	Rows	KL	KB	A	H	Pack.	Art.-No.
	Brake Caliper Brushes with Two-Components Handles		mm | *inch*	mm | *inch*	mm | *inch*	mm | *inch*		
1	**STA** straight 0.35 | *0.014"*	2 x 13	225 | *9*	12 | *1/2*	90 | *3 1/2*	22 | *7/8*	10	**182.401**
	STA crimped 0.30 | *0.012"*	2 x 13	225 | *9*	12 | *1/2*	90 | *3 1/2*	22 | *7/8*	10	**182.411**
2	**STA** straight 0.35 | *0.014"*	2 x 12/13	225 | *9*	12 | *1/2*	90 | *3 1/2*	12/18 | *1/2/5/8*	10	**182.431***
3	**ROF** straight 0.35 | *0.014"*	2 x 13	225 | *9*	12 | *1/2*	90 | *3 1/2*	22 | *7/8*	10	**182.421**
4	**MES** crimped 0.25 | *0.010"*	2 x 13	225 | *9*	12 | *1/2*	90 | *3 1/2*	22 | *7/8*	10	**182.451**
	Hand Brushes with Plastic Handles							
5	**STA** straight 0.35 | *0.014"*	2	285 | *11 1/4*	20 | *3/4*	130 | *5 1/8*	25 | *1*	10	**185.121**
	STA straight 0.35 | *0.014"*	3	285 | *11 1/4*	26 | *1*	130 | *5 1/8*	25 | *1*	10	**185.131**
	STA straight 0.35 | *0.014"*	4	285 | *11 1/4*	31 | *1 1/4*	130 | *5 1/8*	25 | *1*	10	**185.141**
	STA straight 0.35 | *0.014"*	5	285 | *11 1/4*	31 | *1 1/4*	130 | *5 1/8*	25 | *1*	10	**185.151**
	ROF crimped 0.35 | *0.014"*	2	285 | *11 1/4*	20 | *3/4*	130 | *5 1/8*	25 | *1*	10	**185.421**
	ROF crimped 0.35 | *0.014"*	3	285 | *11 1/4*	26 | *1*	130 | *5 1/8*	25 | *1*	10	**185.431**
	ROF crimped 0.35 | *0.014"*	4	285 | *11 1/4*	31 | *1 1/4*	130 | *5 1/8*	25 | *1*	10	**185.441**
	ROF crimped 0.35 | *0.014"*	5	285 | *11 1/4*	31 | *1 1/4*	136 | *5 1/8*	25 | *1*	10	**185.451**
	MES straight 0.35 | *0.014"*	2	285 | *11 1/4*	20 | *3/4*	130 | *5 1/8*	25 | *1*	10	**185.621**
	MES straight 0.35 | *0.014"*	3	285 | *11 1/4*	26 | *1*	130 | *5 1/8*	25 | *1*	10	**185.631**
	MES straight 0.35 | *0.014"*	4	285 | *11 1/4*	31 | *1 1/4*	130 | *5 1/8*	25 | *1*	10	**185.641**
	MES straight 0.35 | *0.014"*	5	285 | *11 1/4*	31 | *1 1/4*	130 | *5 1/8*	25 | *1*	10	**185.651**
	Hand Brushes with Two-Components Handles							
6	**ROF** straight 0.35 | *0.014"*	3	285 | *11 1/4*	26 | *1*	130 | *5 1/8*	25 | *1*	10	**186.431**

* Special hard brushes, pointed | For the food industry

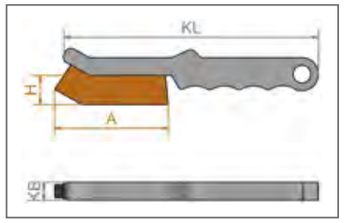

Special Hand Brushes

1 2 3 4 5 6 7

Special Hand Brushes

	Filling	Rows	KL	KB	A	H	Pack.	Art.-No.
			mm | *inch*	mm | *inch*	mm | *inch*	mm | *inch*		
EAN 1	**Rivet Brushes**							
	STA straight 0.35 | *0.014"*	3 x 15	290 | *11 3/8*	35 | *1 1/2*	135 | *5 3/8*	35 | *1 1/2*	12	**120.801**
	ROF straight 0.35 | *0.014"*	3 x 15	290 | *11 3/8*	35 | *1 1/2*	135 | *5 3/8*	35 | *1 1/2*	12	**120.811**
	RO8 straight 0.30 | *0.012"*	3 x 15	290 | *11 3/8*	35 | *1 1/2*	135 | *5 3/8*	35 | *1 1/2*	12	**120.831**
	ROF straight 0.35 | *0.014"* with Plastic Handles	3 x 15	290 | *11 3/8*	31 | *1 1/4*	135 | *5 3/8*	35 | *1 1/2*	12	**185.811**
EAN 2	**Hand Brushes with Scraper**							
	STA straight 0.35 | *0.014"*	4 x 15	290 | *11 3/8*	33 | *1 1/4*	130 | *5 1/8*	25 | *1*	12	**120.401**
	STA straight 0.35 | *0.014"*	6 x 15	290 | *11 3/8*	38 | *1 1/2*	130 | *5 1/8*	25 | *1*	12	*120.601*
	ROF straight 0.35 | *0.014"*	4 x 15	290 | *11 3/8*	33 | *1 1/4*	130 | *5 1/8*	25 | *1*	12	*120.412*
3	**Hand Brushes Heavy Duty**							
	STA straight 0.35 | *0.014"*	2 x 16	290 | *11 3/8*	30 | *1 1/4*	150 | *6*	32 | *1 1/4*	12	**136.101**
	STA straight 0.35 | *0.014"*	3 x 16	290 | *11 3/8*	35 | *1 1/2*	150 | *6*	32 | *1 1/4*	12	**136.102**
	STA straight 0.35 | *0.014"*	4 x 16	290 | *11 3/8*	40 | *1 3/8*	150 | *6*	32 | *1 1/4*	12	**136.103**
	Hand Brushes Export Model							
4	**STA** straight 0.35 | *0.014"*	4 x 17	300 | *12*	30 | *1 1/4*	130 | *5 1/8*	25 | *1*	12	**122.401**
5	**STA** straight 0.35 | *0.014"*	4 x 19	350 | *14*	30 | *1 1/4*	160 | *6 3/8*	30 | *1 1/4*	6	**122.801**
6	**BRO** straight 0.30 | *0.012"*	4 x 19	350 | *14*	30 | *1 1/4*	150 | *6*	30 | *1 1/4*	6	**122.821**
7	**Universal Wire Brushes**							
	STM crimped 0.30 | *0.012"*	1	260 | *10 1/4*	10 | *3/8*	135 | *5 3/8*	28 | *1*	24	**056.001**
	STA crimped 0.35 | *0.014"*	1	260 | *10 1/4*	10 | *3/8*	135 | *5 3/8*	28 | *1*	24	**056.301**
	ROF crimped 0.30 | *0.012"*	1	260 | *10 1/4*	10 | *3/8*	135 | *5 3/8*	28 | *1*	24	**056.501**
	MES crimped 0.30 | *0.012"*	1	260 | *10 1/4*	10 | *3/8*	135 | *5 3/8*	28 | *1*	24	**056.701**

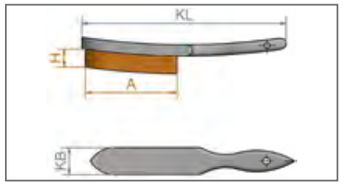

Item Nos. in bold are available ex stock.
Consider our minimum order value for *italic printed* article numbers (see page 152).

STA	= steel wire
STM	= brass coated steel
ROF	= stainless steel wire
RO8	= stainless steel wire, extremely heat resistant
MES	= brass wire
BRO	= bronze wire

Spark Plug Brushes

1 2 3 4 5 6

Spark Plug Brushes

	Filling	Rows	KL mm | *inch*	KB mm | *inch*	A mm | *inch*	H mm | *inch*	Pack.	Art.-No.
1	**MES** crimped 0.15 | *0.006"*	2 x 5	100 | *4*	15 | *5/8*	25 | *1*	15 | *5/8*	12	**125.111**
EAN 2	**MES** crimped 0.15 | *0.006"*	3 x 5/6	150 | *6*	15 | *5/8*	40 | *1 3/8*	15 | *5/8*	12	**125.211**
EAN	**STA** crimped 0.15 | *0.006"*	3 x 5/6	150 | *6*	15 | *5/8*	40 | *1 3/8*	15 | *5/8*	12	**125.201**
EAN	**ROF** crimped 0.15 | *0.006"*	3 x 5/6	150 | *6*	15 | *5/8*	40 | *1 3/8*	15 | *5/8*	12	**125.231**
EAN	**MES** crimped 0.15 | *0.006"* / PP	3 x 5/6	150 | *6*	15 | *5/8*	40 | *1 3/8*	15 | *5/8*	12	**125.221**
EAN	**MES** crimped 0.15 | *0.006"*	3 x 5/6	150 | *6*	15 | *5/8*	40 | *1 3/8*	15 | *5/8*	12	**125.311***
EAN	**ROF** crimped 0.20 | *0.008"*	3 x 5/6	150 | *6*	15 | *5/8*	40 | *1 3/8*	15 | *5/8*	12	**125.241**
EAN	**PA** straight 0.30 | *0.012"*	3 x 5/6	150 | *6*	15 | *5/8*	40 | *1 3/8*	15 | *5/8*	12	**125.251**
3	**BRO** crimped 0.15 | *0.006"*	3 x 5/6	200 | *8*	15 | *5/8*	40 | *1 3/8*	15 | *5/8*	12	**132.801**
	MES crimped 0.15 | *0.006"*	5 x 8/10	190 | *1 1/2*	24 | *1*	55 | *2 1/4*	18 | *3/4*	12	**125.511**
4	**MES** crimped 0.15 | *0.006"* / PP	5 x 8/10	190 | *1 1/2*	24 | *1*	55 | *2 1/4*	12 | *1/2*	12	**125.521**
5	**MES** crimped 0.15 | *0.006"*	4 x 6	155 | *6*	22 | *7/8*	40 | *1 3/8*	18 | *3/4*	12	**182.331****
	Soldering tip brush, extra dense filament, wooden handle orange coated							
EAN 6	**ROF** crimped 0.10 | *0.004"*	3 x 7/8	150 | *6*	15 | *5/8*	39 | *1 3/8*	9	12	**125.234**

* Wooden body varnished | ** Plastic body

Spark Plug Brushes
These small brushes are for all fine brushwork requiring thin wire.
They are available in different sizes and filling marterials. The models 182.001 and 182.331 have plastic bodies, the other models have a beech wood body.
The body of 125.311 is varnished.

Item Nos. in bold are available ex stock.
Consider our minimum order value for *italic printed* article numbers (see page 152).

STA	= steel wire
ROF	= stainless steel wire
MES	= brass wire
BRO	= bronze wire
PA	= polyamide
PP	= polyprophylene
ROS	= horse hair

Fine Scratch Brushes

1 2 3 4 5 6 7 8 9

Fine Scratch Brushes

	Filling	Rows	KL mm | *inch*	KB mm | *inch*	A mm | *inch*	H mm | *inch*	Pack.	Art.-No.
1	**MES** crimped 0.15 | *0.006"*	3	225 | *9*	16 | *5/8*	110 | *4 3/8*	20 | *3/4*	12	**126.311**
1	**MES** crimped 0.15 | *0.006"*	4	225 | *9*	20 | *3/4*	110 | *4 3/8*	20 | *3/4*	12	**126.411**
1	**MES** crimped 0.15 | *0.006"*	5	225 | *9*	24 | *1*	110 | *4 3/8*	20 | *3/4*	12	**126.511**
1	**MES** crimped 0.15 | *0.006"*	6	225 | *9*	28 | *1*	110 | *4 3/8*	20 | *3/4*	12	**126.611**
1	**MES** crimped 0.15 | *0.006"*	8	225 | *9*	36 | *1 1/2*	110 | *4 3/8*	20 | *3/4*	12	*126.811*
1	**MES** crimped 0.08 | *0.003"*	4	225 | *9*	20 | *3/4*	110 | *4 3/8*	20 | *3/4*	12	**126.441**
1	**MES** crimped 0.10 | *0.004"*	4	225 | *9*	20 | *3/4*	110 | *4 3/8*	20 | *3/4*	12	**126.431**
1	**MES** crimped 0.15 | *0.006"*	4	225 | *9*	20 | *3/4*	100 | *4*	20 | *3/4*	12	**182.162****
	ROF crimped 0.15 | *0.006"*	4	225 | *9*	20 | *3/4*	110 | *4 3/8*	20 | *3/4*	12	**126.481**
9	**ROF** crimped 0.15 | *0.006"*	4	225 | *9*	20 | *3/4*	100 | *4*	20 | *3/4*	12	**182.152****
2	**STA** crimped 0.15 | *0.006"*	4	225 | *9*	20 | *3/4*	110 | *4 3/8*	20 | *3/4*	12	**126.401**
3	**PA** straight 0.30 | *0.012"*	4	225 | *9*	20 | *3/4*	110 | *4 3/8*	20 | *3/4*	12	**126.451**
3	**PP** straight 0.30 | *0.012"*	4	225 | *9*	20 | *3/4*	100 | *4 3/8*	20 | *3/4*	12	**182.172****
4	**ROS**	4	225 | *9*	20 | *3/4*	110 | *4 3/8*	20 | *3/4*	12	**126.472**
	Special Brushes							
6	**MES** crimped 0.35 | *0.014"*	4 x 11/12	350 | *14*	22 | *7/8*	80 | *3*	10 | *3/8*	12	**137.701**
7	**MES** crimped 0.30 | *0.012"*	5 x 9	700 | *27 1/2*	25 | *1*	54 | *2 1/4*	6 | *1/4*	12	**138.704**
	MES crimped 0.30 | *0.012"*	4 x 11/12	450 | *17 3/4*	22 | *7/8*	80 | *3*	8 | *5/16*	12	**138.705**
5	**MES** crimped 0.35 | *0.014"*	4 x 11/12	350 | *14*	22 | *7/8*	77 | *3*	10 | *3/8*	12	**182.807****
5	**MES** crimped 0.35 | *0.014"*	4 x 11/12	400 | *15 3/4*	20 | *3/4*	77 | *3*	10 | *3/8*	12	**183.704****
5	**MES** crimped 0.35 | *0.014"*	4 x 11/12	450 | *17 3/4*	22 | *7/8*	77 | *3*	10 | *3/8*	12	**182.811****
5	**MES** crimped 0.30 | *0.012"*	5 x 9/8	700 | *27 1/2*	25 | *1*	54 | *2 1/4*	6 | *1/4*	12	*183.706***
8	**MES** crimped 0.25 | *0.010"*	2 x 10	200 | *8*	15 | *5/8*	80 | *3*	19 | *3/4*	12	**132.701**

** Plastic body | For the food industry

Fine Scratch Brushes
Also called watchmaker and goldsmith brushes. The brushes have a very high density of filling wires and are available in different widths. These brushes are used among other things to apply solvents and other cleansing agents.

Special Brushes
The brushes were manufactured according to our customers' specification and show variations, which are possible through our flexible manufacturing procedures.

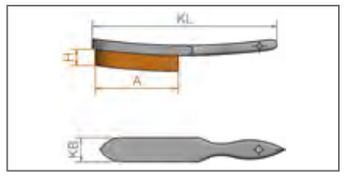

Special Models

Hand Brushes Rectangular and Violin
There are many filling wires in these stable universal brushes.

Hand Brushes with Bracket
The wooden body is pointed to the front end, the plastic bracket is nailed on. The model 140.901 has an adjustable stock board which enables an adjustment to brush firmness.

These special models are mainly ordered by our export customers.

Brushes for removing wet storage stain
Zinc coated surfaces are needed for corrosion protection. Often after the zinc coating of work parts, under wet conditions chemical reactions occur which cause wet storage stain. The special bronze wire allows the effective removal of white rust without smashing the zinc coating which has to be treated.

Radiator Brushes
This narrow, long shaped brush is ideal for hard to reach areas on heaters and radiators. The model 121.211 has a straight body, the other models have a curved body.

Staining Brushes
The treated wood is prepared with these staining brushes. By using fibre and bronze wire the brushes are insensitive against all normal
chemical based solutions. The model 144.211 has an adjustable stock board which enables an adjustment to brush firmness.
With the staining brushes 144.701 and 144.801 the surface after the staining process is polished by the leather insert strips. Any standing wood fibre is also smoothed.

File Cleaners
The brushes for cleaning wood and metal files are available in different sizes and with different file card. The file card is glued on to the wooden body.

File Card in Rolls
Various roughing-up tools can be manufactured with this material, which is also available in different sizes and filling materials. Available in meters or if required in single pieces.

Bricklayer's Brushes
For pre and retreatment of brickwork for painters and bricklayers. All models have a jute or plastic strap.

Plasterer's Brushes
These are for roughening and structuring of plaster. Body is made of beech wood, the steel pins are hardened.

Spiked Rollers
For use before the removal of wallpaper. The spiked roller perforates the paper allowing absorption of stripping solvent. The roller is of plastic with the steel pins obliquely arranged to ensure maximum efficiency in use. The handle can be made longer with customised telescopic handles. For safety the roller is supplied with a protective cover.

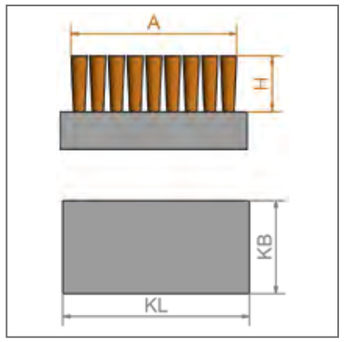

Item Nos. in bold are available ex stock.
Consider our minimum order value for *italic printed* article numbers (see page 152).

STA = steel wire
STM = brass coated steel
BRO = bronze wire

PEFC/04-31-0389

Promoting sustainable forest management www.pefc.de

Special Hand Brushes

	Filling	Rows	KL	KB	A	H	Pack.	Art.-No.
	Hand Brushes Rectangular and Violin		mm | *inch*	mm | *inch*	mm | *inch*	mm | *inch*		
1	**STA** straight 0.35 | *0.014"*	6 x 19	185 | *7 1/4*	57 | *2 1/4*	175 | *7*	30 | *1 1/4*	12	**140.201**
2	**STA** straight 0.35 | *0.014"*	5	200 | *8*	60 | *2 3/8*	190 | *7 1/2*	35 | *1 1/2*	16	**141.231**
3	**STM** straight 0.35 | *0.014"*	5	200 | *8*	55 | *2 1/4*	170 | *6 5/8*	40 | *1 3/8*	36	*140.641*
	Hand Brushes with Bracket							
4	**STA** straight ca. 0.35 | *0.014"*	5	225 | *9*	55 | *2 1/4*	200 | *8*	38 | *1 1/2*	16	**140.901***
5	**STM** crimped 0.35 | *0.014"*	5	225 | *9*	55 | *2 1/4*	200 | *8*	38 | *1 1/2*	16	**140.811**
	Hand Brushes with Strap							
6	**STA** straight 0.50 | *0.020"*	7	200 | *8*	70 | *2 3/4*	185 | *7 1/4*	35 | *1 1/2*	12	**141.421**
	Hand Brushes for removing wet storage stain							
7	**BRO** crimped 0.08 | *0.003"*	11 x 18	120 | *4 3/4*	70 | *2 3/4*	110 | *4 3/8*	14 | *4/7*	4	**152.811**

* with adjustable board

Special Models

Radiator Brushes

	Filling	Rows	KL mm | *inch*	KB mm | *inch*	A mm | *inch*	H mm | *inch*	Pack.	Art.-No.
1	**STA** straight 0.25 | *0.010"*	3 x 13	420 | *16 1/2*	20 | *3/4*	115 | *4 1/2*	20 | *3/4*	12	**121.111***
2	**STA** straight 0.25 | *0.010"*	3 x 13	420 | *16 1/2*	20 | *3/4*	115 | *4 1/2*	20 | *3/4*	12	**121.211****

Staining Brushes

	Filling	Rows	KL mm | *inch*	KB mm | *inch*	A mm | *inch*	H mm | *inch*	Pack.	Art.-No.
3	**MES** crimped 0.15 | *0.006"*	7	150 | *6*	50 | *2*	140 | *5 1/2*	20 | *3/4*	12	**144.001**
4	**BRO** crimped 0.15 | *0.006"*	7	150 | *6*	50 | *2*	140 | *5 1/2*	20 | *3/4*	12	**144.011**
5	**BRO** 0.15 | *0.006"* / **FIB**	7	150 | *6*	50 | *2*	140 | *5 1/2*	20 | *3/4*	12	**144.021**
	BRO crimped 0.15 | *0.006"*	7	180 | *7*	60 | *2 3/8*	170 | *6 5/8*	20 | *3/4*	12	**144.111**
	BRO 0.15 | *0.006"* / **FIB**	7	180 | *7*	60 | *2 3/8*	170 | *6 5/8*	20 | *3/4*	12	**144.121**
6	**BRO** crimped 0.15 | *0.006"*	6	150 | *6*	50 | *2*	130 | *5 1/8*	20 | *3/4*	12	**144.211*****
	BRO crimped 0.15 | *0.006"*	6	150 | *6*	50 | *2*	130 | *5 1/8*	15 | *5/8*	12	**144.311**
7	**BRO** crimped 0.15 | *0.006"*	6	180 | *7*	60 | *2 3/8*	160 | *6 3/8*	15 | *5/8*	12	**144.411**
8	**Leather + FIB**	3/7	175 | *6 7/8*	60 | *2 3/8*	160 | *6 3/8*	20 | *3/4*	12	**144.701**
	Leather + FIB	4/9	203 | *8*	72 | *2 7/8*	190 | *7 1/2*	20 | *3/4*	12	**144.801**

* Wooden body curved | ** Wooden body straight | *** with adjustable board

Item Nos. in bold are available ex stock.
Consider our minimum order value for *italic printed* article numbers (see page 152).

STA	= steel wire
ROF	= stainless steel wire
MES	= brass wire
BRO	= bronze wire
PP	= polypropylene
FIB	= fibre

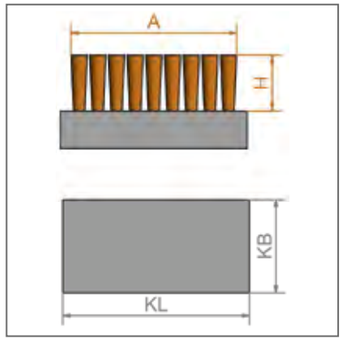

File Cleaners / Roughering Brushes

	File Cards	KL mm | *inch*	KB mm | *inch*	A mm | *inch*	Pack.	Art.-No.
1	**STA** 0.30 | *0.012"*	210 | *8 1/4*	25 | *1*	100 | *4*	12	**037.101**
	STA 0.30 | *0.012"*	250 | *10*	40 | *1 3/8*	115 | *4 1/2*	12	**037.201**
	STA 0.30 | *0.012"*	250 | *10*	40 | *1 3/8*	115 | *4 1/2*	100	**037.200**
	ROF 0.30 | *0.012"*	250 | *10*	40 | *1 3/8*	115 | *4 1/2*	12	**037.221**
2	**ROF** 0.60	170 | *6 3/4*	30 | *1 1/4*	24 | *1*	20	**037.710**

3 File Cards

Filling, without interval	STA 0,30 width 25 Art.-No.	STA 0,30 width 38 Art.-No.	STA 0,30 width 51 Art.-No.	ROF 0,30 width 38 Art.-No.
	000.311*	**000.321***	**000.331***	**000.323***

Bricklayer's Brushes with Strap

	Filling	Rows	KL mm | *inch*	KB mm | *inch*	A mm | *inch*	H mm | *inch*	Pack.	Art.-No.
4	**STA** straight 0.25 | *0.010"*	9	210 | *8 1/4*	100 | *4*	200 | *8*	35 | *1 1/2*	12	**142.101**
5	**MES** crimped 0.20 | *0.008"* / **PP**	9	210 | *8 1/4*	95 | *3 3/4*	200 | *8*	20 | *3/4*	12	**142.211****

Plasterer's Brushes

	Filling	KL mm | *inch*	KB mm | *inch*	A mm | *inch*	H mm | *inch*	Pack.	Art.-No.
6	86 steel Pins hardend	190 | *7 1/2*	97 | *3 3/4*	165 | *6 1/2*	16 | *5/8*	12	**061.101**

7 Spiked Rollers

Filling	Rows	KL mm | *inch*	KB mm | *inch*	A mm | *inch*	H mm | *inch*	Pack.	Art.-No.
steel Pins on plastic roller, with Protective Cover	12	290 | *11 3/8*	25 | *1*	148 | *5 7/8*	7 | *1/4*	10	**064.050**

* Please indicate length. | ** Wooden body varnished

Brooms and Scrubs

Brooms and Scrubs
Brooms and Scrubs for the use in all industrial companies and craftsman's establishments.

The shown brooms and scrubs are the best selling models.

The brooms with flat steel wire 1.80 x 0.45 mm make the so called broom lines on cement floors thus receiving a rough surface.

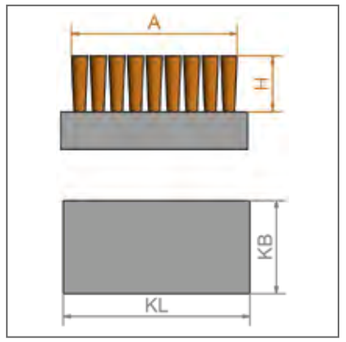

Item Nos. in bold are available ex stock.
Consider our minimum order value for *italic printed* article numbers (see page 152).

STA = steel wire
ROF = stainless steel wire
MES = brass wire

PEFC
PEFC/04-31-0389

Promoting sustainable forest management
www.pefc.de

1 Brooms Flat Wooden Stock, with Handle Hole 23 Ø

Filling	Rows	KL mm | *inch*	KB mm | *inch*	A mm | *inch*	H mm | *inch*	Pack.	Art.-No.
STA straight 0.50 | *0.020"*	5 x 16/17	250 | *10*	60 | *2 3/8*	270 | *10 5/8*	70 | *2 3/4*	12	**147.101**
STA straight 0.50 | *0.020"*	5 x 20	300 | *12*	60 | *2 3/8*	330 | *13*	70 | *2 3/4*	12	**147.401**
STA straight 0.50 | *0.020"*	6 x 20/21	300 | *12*	70 | *2 3/4*	330 | *13*	70 | *2 3/4*	12	**147.201**
STA straight 0.50 | *0.020"*	6 x 20/21	300 | *12*	70 | *2 3/4*	330 | *13*	70 | *2 3/4*	42	**147.200**
ROF straight 0.50 | *0.020"*	6 x 20	300 | *12*	70 | *2 3/4*	330 | *13*	70 | *2 3/4*	12	**147.261**
STA straight 0.50 | *0.020"*	6 x 23	350 | *14*	70 | *2 3/4*	390 | *15 3/8*	70 | *2 3/4*	12	**147.301**

2 Brooms Raised Wooden Stock, with Handle Hole 23 Ø

Filling	Rows	KL mm | *inch*	KB mm | *inch*	A mm | *inch*	H mm | *inch*	Pack.	Art.-No.
STA straight 0.50 | *0.020"*	5 x 16/17	250 | *8 1/4*	60 | *2 3/8*	270 | *10 5/8*	70 | *2 3/4*	12	**146.101**
STA straight 0.50 | *0.020"*	6 x 20/21	300 | *12*	70 | *2 3/4*	330 | *13*	70 | *2 3/4*	12	**146.201**
STA straight 0.50 | *0.020"*	6 x 23/24	350 | *14*	70 | *2 3/4*	390 | *15 3/8*	70 | *2 3/4*	12	**146.301**

Scrubs, with Handle Hole 23 Ø

	Filling	Rows	KL mm | *inch*	KB mm | *inch*	A mm | *inch*	H mm | *inch*	Pack.	Art.-No.
3	**STA** straight 0.35 | *0.014"*	6 x 16/17	220 | *8 5/8*	60 | *2 3/8*	225 | *9*	35 | *1 1/2*	12	**148.101**
3	**ROF** straight 0.35 | *0.014"*	6 x 16/17	220 | *8 5/8*	60 | *2 3/8*	225 | *9*	35 | *1 1/2*	12	**148.161**
3	**MES** crimped 0.25 | *0.010"*	6 x 16/17	220 | *8 5/8*	60 | *2 3/8*	225 | *9*	25 | *1*	12	**148.141**
3	**STA** straight 0.25 | *0.010"*	6 x 17/18	240 | *9 1/2*	70 | *2 3/4*	245 | *9 5/8*	35 | *1 1/2*	12	**148.201**
4	**STA** straight 0.40 | *0.016"*	7 x 15/16	230 | *9*	65 | *2 1/2*	220 | *8 5/8*	35 | *1 1/2*	12	**148.601***

* Wooden body curved

Dusters

Dusters
Depending on the surrounding and application area, dusters are available in various models and with various filling materials. For coarse and light adherent dirt, dusters with wire filament are ideal.

Next to horse hair we offer dusters with coco filament as a good value alternative.

The duster with polyprophylene filament (straight plastic fibre) can be cleaned easily and therefore other surfaces do not get dirty. Since the water absorption of polypropylene is very low, the duster can be used also under wet conditions.

Further models in special execution with different filling materials and trim length available.

Dusters custom-made
Beside the mentioned models we provide special models with filling material and trim length according to your requirements.

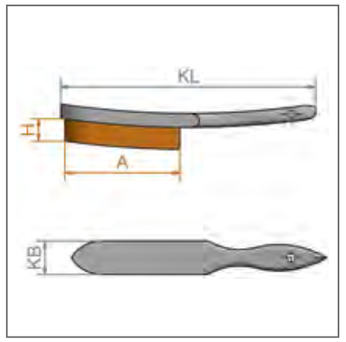

Item Nos. in bold are available ex stock.
Consider our minimum order value for *italic printed* article numbers (see page 152).

STA	= steel wire
MES	= brass wire
PP	= polyprophylene
ROS	= horse hair

PEFC/04-31-0389

Promoting sustainable forest management
www.pefc.de

Dusters

	Filling	Rows	KL mm | *inch*	KB mm | *inch*	A mm | *inch*	H mm | *inch*	Pack.	Art.-No.
1	**coco**	4	280 | *11*	40 | *1 3/8*	160 | *6 3/8*	70 | *2 3/4*	12	**124.201**
2	**coco**	4	430 | *17*	40 | *1 3/8*	165 | *6 1/2*	70 | *2 3/4*	20	**124.401**
3	**MES** crimped 0.25 | *0.010"*	4	320 | *12 1/2*	35 | *1 1/2*	150 | *6*	40 | *1 3/8*	12	**124.121**
4	**STA** straight 0.25 | *0.010"*	4	320 | *12 1/2*	35 | *1 1/2*	150 | *6*	60 | *2 3/8*	12	**124.101**
5	**ROS**	6	300 | *12*	43 | *1 3/4*	165 | *6 1/2*	50 | *2*	20	**124.301***
EAN 6	**PP**	4	320 | *12 1/2*	35 | *1 1/2*	175 | *6 7/8*	70 | *2 3/4*	12	**124.801**

* Wooden body varnished

Weed Brushes and Weed Brooms

Weed Brush
This brush with V shaped filling material is ideal for the removal of moss and weeds in joints and edges on pavements, courtyards or cobbled areas.

Due to the long handle an ergonomic and effective working is possible. Without stooping, your back is preserved, though it is possible to remove weeds aggressively and precisely.

The brush with set filling material allows a cleaning of edges and joints which are hard to reach.

Weed Broom
As well as the weed brush, the weed broom is a brush for outdoors.
Ideally moss and weeds can be removed from terrace boards or cobblestones. An easy and clean working without stooping makes the brush to an effective broom with depth effects. High quality, with brass coated steel wires guarantee a long lifetime of the brush in the well known LESSMANN quality „Made in Germany".

All standard hand brushes have a bar code stamp and LESSMANN-imprint.

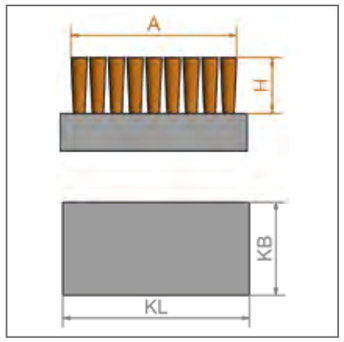

Displaybox

Item Nos. in bold are available ex stock.
Consider our minimum order value for *italic printed* article numbers (see page 152).

STA = steel wire
STM = brass coated steel

EAN

Weed Brushes, with Handle Hole 23 Ø

	Filling	KL	KB	H	Rows	Pack.	Art.-No.
	without handle	mm | *inch*	mm | *inch*	mm | *inch*			
1	**STA** 0.35 | *0.014"*	100 | *4*	35 | *1 1/2*	36 | *1 1/2*	3	25	**151.108**
2	**STM** 0.35 | *0.014"* Filling set in working direction	100 | *4*	35 | *1 1/2*	36 | *1 1/2*	3	25	**151.511**
3	**STA** 0.35 | *0.014"* with scraper	100 | *4*	35 | *1 1/2*	42 | *1 5/8*	3	25	**151.109**
	with handle, 1400 mm long, Ø 28 mm, incl. Displaybox						
4	**STA** 0.35 | *0.014"*	100 | *4*	35 | *1 1/2*	36 | *1 1/2*	3	30	*151.991.07**
	STM 0.35 | *0.014"* Filling set in working direction	100 | *4*	35 | *1 1/2*	36 | *1 1/2*	3	30	*151.995.07**

EAN

Weed Broom, with Handle Hole 23 Ø

	Filling	KL	KB	H	Rows	Pack.	Art.-No.
	without handle	mm | *inch*	mm | *inch*	mm | *inch*			
5	**STM** 0.50 | *0.020"*	140 | *5 1/2*	60 | *2 3/8*	70/60 | *2 3/4 /2 3/8*	10/9	16	**152.510**
	with handle, 1400 mm long, Ø 28 mm, incl. Displaybox						
	STM 0.50 | *0.020"*	140 | *5 1/2*	60 | *2 3/8*	70/60 | *2 3/4 /2 3/8*	10/9	12	**152.995.07***

* Delivery only in full packaging units.

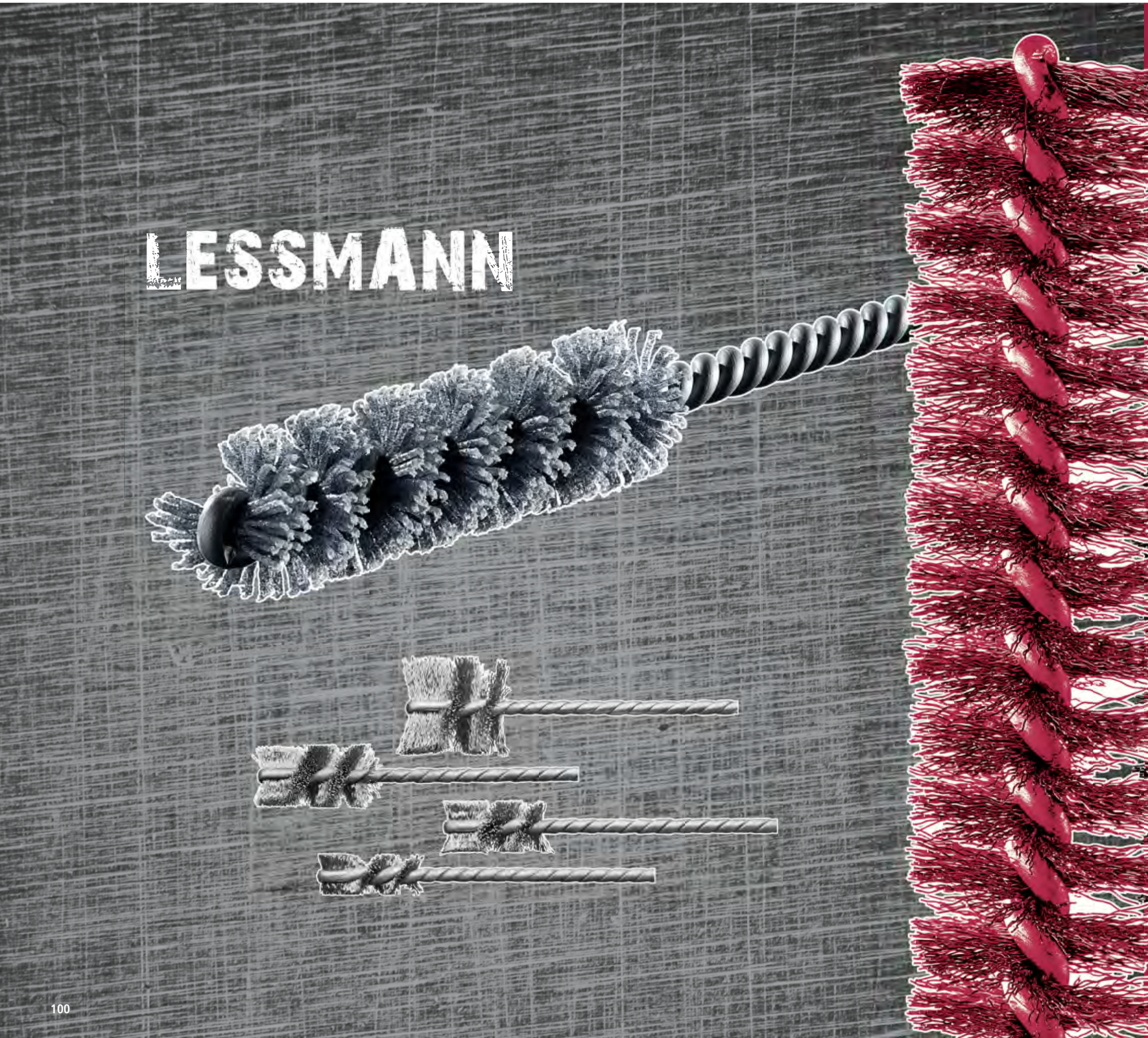
LESSMANN

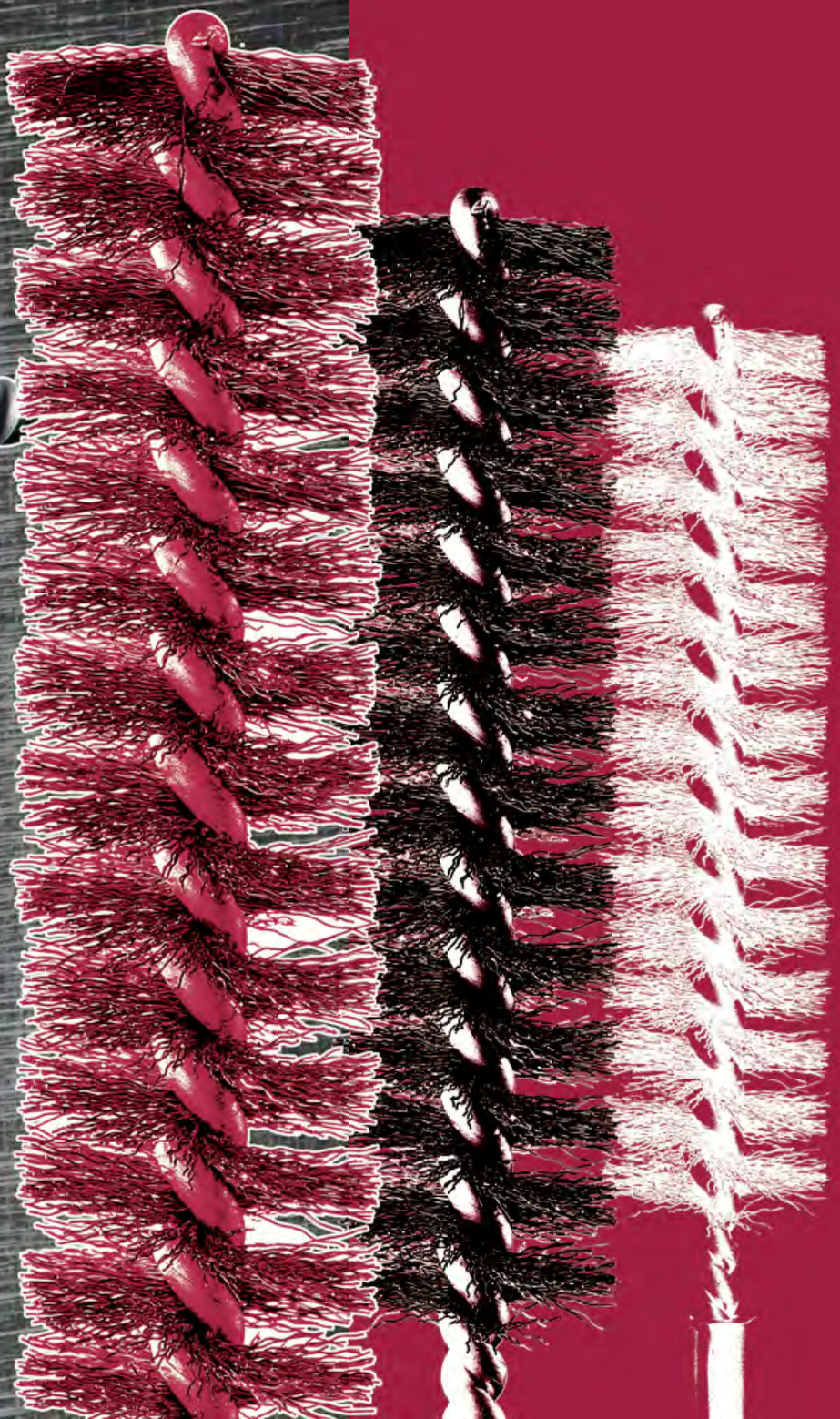

Micro Interior Brushes

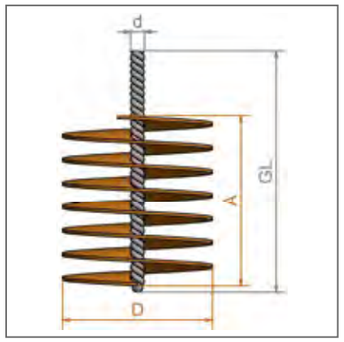

Item Nos. in bold are available ex stock.
Consider our minimum order value for *italic printed* article numbers (see page 152).

AO = aluminium oxide bristles

Interior brushes with zinc coated twisted wire and single spiral
Due to the filling of aluminium oxide or silicon carbide their usage is more flexible than with conventional interior brushes.

Interior brushes with abrasive filaments are usually used for deburring bores, cross bores, o-ring recesses and for polishing and cleaning small bores.

Due to the flexible surface of the bristles the interior brushes suit to the contour of the bore and areas which are hard to reach can be treated. Abrasive bristles also have grinding effects on the side. That allows a rounding of the edges also on cross bores.

Also brushes with **diamond** filling are available, that causes an even more aggressive surface of the brush.

Micro Interior Brushes, Steel Wire
Micro interior brushes with steel wire are used as thread brushes for descaling, deburring or cleaning:
- Cross corners
- Crossovers
- Tap holes
- Slots

The brushes can be used either manually or mechanically.

Please do not hesitate to contact us, we will also find for special applications a compatible solution. Due to a fully automated production, LESSMANN offers high quality to reasonable prices.

Mechanical Application
Only use the brush with the indicated maximal peripheral speed (RPM max.). The max. RPM only is allowed when the brush is clamped min. for 10 mm into the tool. When the brush is inserted into the suitable work piece, higher RPMs are possible. **Only use the brush right rotating.**

Stainless Steel Brushes
Information on working on stainless steel you find at www.lessmann.com

Mikro Interior Brushes are also available with special contours, e.g. **layered cut.**

Please ask for our special leaflet „Interior Brushes".

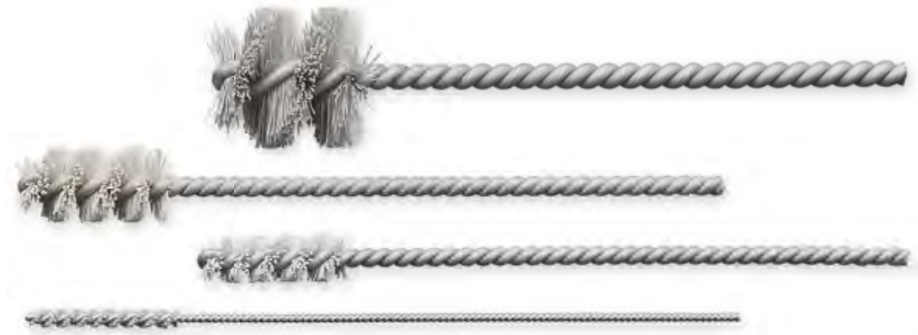

Microabrasive Interior Brushes IBE, Aluminum Oxide Bristles

D mm | *inch*	GL mm | *inch*	A mm | *inch*	d mm | *inch*	RPM max.	Pack.	AO 600/0.30 Art.-No.	AO 1000/0.25 Art.-No.
3.2 | *1/8*	125 | *5*	25 | *1*	1.5 | *1/16*	800	10	**541.084**	*540.067*
4.2 | *11/64*	125 | *5*	25 | *1*	2.2 | *3/32*	1,000	10	**541.045**	*540.068*
4.8 | *3/16*	125 | *5*	25 | *1*	2.2 | *3/32*	1,000	10	**541.083**	*540.069*
5.5 | *7/32*	125 | *5*	25 | *1*	2.2 | *3/32*	1,000	10	**541.079**	*540.070*
6.6 | *17/64*	125 | *5*	25 | *1*	2.5 | *3/32*	1,000	10	**541.037**	*540.071*
8.2 | *21/64*	125 | *5*	25 | *1*	3.2 | *1/8*	2,000	10	**541.076**	*540.072*
9.8 | *25/64*	125 | *5*	25 | *1*	3.2 | *1/8*	2,000	10	**541.077**	*540.073*
11.5 | *29/64*	125 | *5*	25 | *1*	3.7 | *5/32*	2,000	10	**541.085**	*540.074*
13 | *33/64*	125 | *5*	25 | *1*	3.7 | *5/32*	2,000	10	**541.087**	*540.075*
17.5 | *11/16*	125 | *5*	25 | *1*	4.7 | *3/16*	2,000	10	**541.039**	
16 | *5/8*	125 | *5*	25 | *1*	3.7 | *5/32*	2,000	10	**541.089**	*540.076*
20 | *51/64*	125 | *5*	25 | *1*	4.7 | *3/16*	2,000	10	**541.093**	*540.077*
25 | *1*	125 | *5*	25 | *1*	4.7 | *3/16*	2,000	10	**541.095**	*540.078*

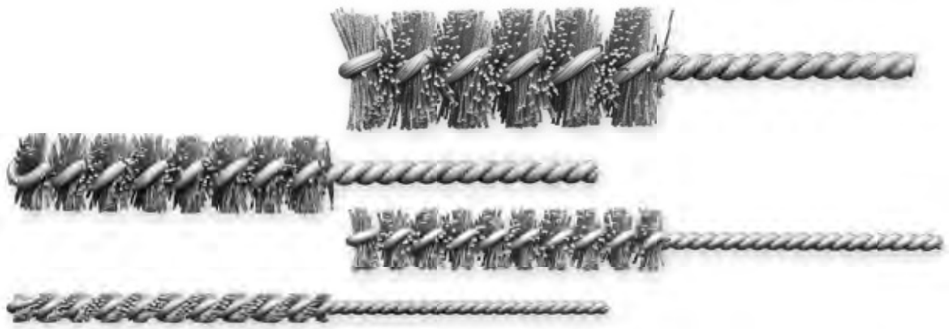

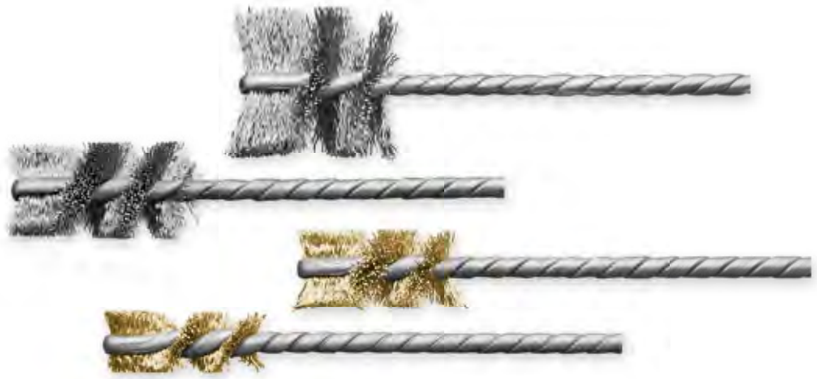

Microabrasive Interior Brushes IBE, Silicon Carbide Bristles

D mm | *inch*	GL mm | *inch*	A mm | *inch*	d mm | *inch*	RPM max.	Pack.	**SIC 120/0.6** Art.-No.	**SIC 320/0.6/**0,3** Art.-No.	**SIC 1000/0.25** Art.-No.
1.2 | *3/64*	100 | *4*	12 | *15/32*	0.7 | *1/32*	500	10			**545.200.12***
1.9 | *5/64*	100 | *4*	18 | *45/64*	0.7 | *1/32*	500	10			**545.200.19**
2.2 | 3/32	100 | *4*	18 | *45/64*	0.9 | *1/32*	1,000	10		*543.200.22***	**545.200.22**
2.6 | *7/64*	100 | *4*	25 | *1*	1.0 | *3/64*	1,000	10		*543.200.26***	**545.200.26**
3.2 | *1/8*	100 | *4*	25 | *1*	1.7 | *1/16*	1,000	10		*543.200.32***	**545.200.32**
4.2 | *11/64*	125 | *5*	25 | *1*	2.2 | *3/32*	1,000	10	*541.200.42*	*543.200.42***	**545.200.42**
5.5 | *7/32*	125 | *5*	25 | *1*	2.2 | *3/32*	1,000	10	*541.200.55*	*543.200.55***	**545.200.55**
6 | *15/64*	125 | *5*	65 | *2 9/16*	3.0 | *1/8*	1,500	10	**541.200.60**	**543.200.60**	*545.200.60*
8 | *5/16*	125 | *5*	65 | *2 9/16*	3.0 | *1/8*	1,500	10	**541.200.80**	**543.200.80**	*545.200.80*
10 | *25/64*	125 | *5*	65 | *2 9/16*	3.7 | *9/64*	2,000	10	**541.201.00**	**543.201.00**	*545.201.00*
13 | *33/64*	125 | *5*	65 | *2 9/16*	3.7 | *9/64*	2,000	10	**541.201.30**	**543.201.30**	*545.201.30*
16 | *5/8*	125 | *5*	65 | *2 9/16*	5.2 | *13/64*	2,000	10	**541.201.60**	**543.201.60**	*545.201.60*
19 | *3/4*	125 | *5*	65 | *2 9/16*	5.2 | *13/64*	2,000	10	**541.201.90**	**543.201.90**	*545.201.90*
20 | *51/64*	125 | *5*	65 | *2 9/16*	5.7 | *7/32*	2,000	10	**541.202.00**		
22 | *7/8*	125 | *5*	65 | *2 9/16*	5.7 | *7/32*	2,000	10	**541.202.20**	**543.202.20**	*545.202.20*
25 | *1*	125 | *5*	65 | *2 9/16*	5.7 | *7/32*	2,000	10	**541.202.50**	**543.202.50**	*545.202.50*
28 | *1 7/64*	125 | *5*	65 | *2 9/16*	5.7 | *7/32*	2,000	10	**541.202.80**	**543.202.80**	*545.202.80*
30 | *1 3/16*	125 | *5*	65 | *2 9/16*	5.7 | *7/32*	2,000	10	**541.203.00**	**543.203.00**	*545.203.00*
32 | *1 17/64*	125 | *5*	65 | *2 9/16*	5.7 | *7/32*	2,000	10	**541.203.20**	*543.203.20*	*545.203.20*
38 | *1 1/2*	125 | *5*	65 | *2 9/16*	5.7 | *7/32*	2,000	10	**541.203.80**		

* Type IB: with straight / clipped off point

Mechanical Application
Only use the brush with the indicated maximal peripheral speed (RPM max.). The max. RPM only is allowed when the brush is clamped min. for 10 mm into the tool. When the brush is inserted into the suitable work piece, higher RPMs are possible. **Only use the brush right rotating.**

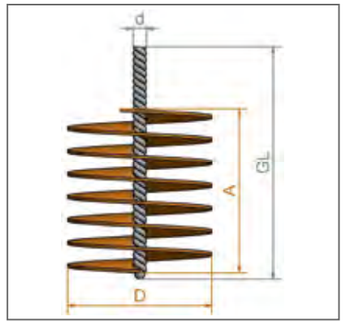

Item Nos. in bold are available ex stock.
Consider our minimum order value for *italic printed* article numbers (see page 152).

STH = steel wire, high tensile, straight
ROH = stainless steel wire, high tensile
MES = brass wire
PA = polyamide
SIC = silicon carbide bristles

Micro Interior Brushes IBH, Steel Wire, Stainless Steel Wire

D mm | *inch*	GL mm | *inch*	A mm | *inch*	d mm | *inch*	RPM max.	Pack.	**STH 0.12** | *0.005"* Art.-No.	**STH 0.20** | *0.008"* Art.-No.	**ROH 0.12** | *0.005"* Art.-No.	**ROH 0.20** | *0.008"* Art.-No.
6 | *15/64*	90 | *3 1/2*	25 | *1*	3.2 | *1/8*	3,500	10	**564.220.60**			
8 | *5/16*	90 | *3 1/2*	25 | *1*	3.2 | *1/8*	3,500	10	**564.220.80**			
10 | *25/64*	90 | *3 1/2*	25 | *1*	3.8 | *5/32*	3,500	10	**565.321.00**	**565.341.00**	**565.521.00**	
13 | *33/64*	90 | *3 1/2*	25 | *1*	3.8 | *5/32*	3,500	10	**565.321.30**	**565.341.30**	**565.521.30**	
16 | *5/8*	90 | *3 1/2*	25 | *1*	3.8 | *5/32*	3,000	10	**565.321.60**	**565.341.60**	**565.521.60**	*565.541.60*
19 | *3/4*	90 | *3 1/2*	25 | *1*	3.8 | *5/32*	3,000	10	**565.321.90**	**565.341.90**	*565.521.90*	*565.541.90*
20 | *51/64*	90 | *3 1/2*	25 | *1*	3.8 | *5/32*	3,000	10		**565.342.00**		**565.542.00**
21 | *53/64*	90 | *3 1/2*	25 | *1*	3.8 | *5/32*	3,000	10	*565.322.10*	*565.342.10*		
24 | *15/16*	90 | *3 1/2*	25 | *1*	3.8 | *5/32*	3,000	10	*565.322.40*			
25 | *1*	90 | *3 1/2*	25 | *1*	3.8 | *5/32*	3,000	10	**565.322.50**	**565.342.50**	565.522.50	**565.542.50**
29 | *1 9/64*	90 | *3 1/2*	25 | *1*	3.8 | *5/32*	3,000	10	*565.322.90*	*565.342.90*		*565.542.90*
32 | *1 17/64*	90 | *3 1/2*	25 | *1*	3.8 | *5/32*	3,000	10	*565.323.20*	*565.343.20*		*565.543.20*

Micro Interior Brushes IBH, Brass Wire and Polyamide

D mm | *inch*	GL mm | *inch*	A mm | *inch*	d mm | *inch*	RPM max.	Pack.	**MES 0.15** | *0.006"* Art.-No.	**MES 0.20** | *0.008"* Art.-No.	**PA 0.30** | *0.012"* Art.-No.
8 | *5/16*	90 | *3 1/2*	25 | *1*	3.2 | *1/8*	3,500	10	*565.730.80*		
10 | *25/64*	90 | *3 1/2*	25 | *1*	3.8 | *5/32*	3,500	10	**565.731.00**		**565.061.00**
13 | *33/64*	90 | *3 1/2*	25 | *1*	3.8 | *5/32*	3,500	10	**565.731.30**		**565.061.30**
16 | *5/8*	90 | *3 1/2*	25 | *1*	3.8 | *5/32*	3,000	10	**565.731.60**		**565.061.60**
20 | *51/64*	90 | *3 1/2*	25 | *1*	3.8 | *5/32*	3,000	10		**565.742.00**	**565.062.00**
25 | *1*	90 | *3 1/2*	25 | *1*	3.8 | *5/32*	3,000	10		**565.742.50**	**565.062.50**

Cylinder Brushes

Cylinder Brushes
For manual cleaning and deburring of tubes, bores etc. Cylinder brushes are also available in other dimensions and materials. When ordering special sizes please mention full specification: total length, filling length, filling material, diameter and quantity.

Cylinder brushes, flat filament
These flat brushes with fine, crimped steel wire are ideal for cleaning areas which are hard to reach. A typical application is removing isolation rests in channels of stators or electric motors.

Stainless Steel Brushes
Information on working on stainless steel you find at www.lessmann.com

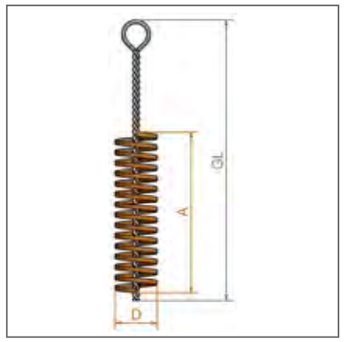

Item Nos. in bold are available ex stock.
Consider our minimum order value for *italic printed* article numbers (see page 152).

STA = steel wire
ROF = stainless steel wire
MES = brass wire
PA = polyamide

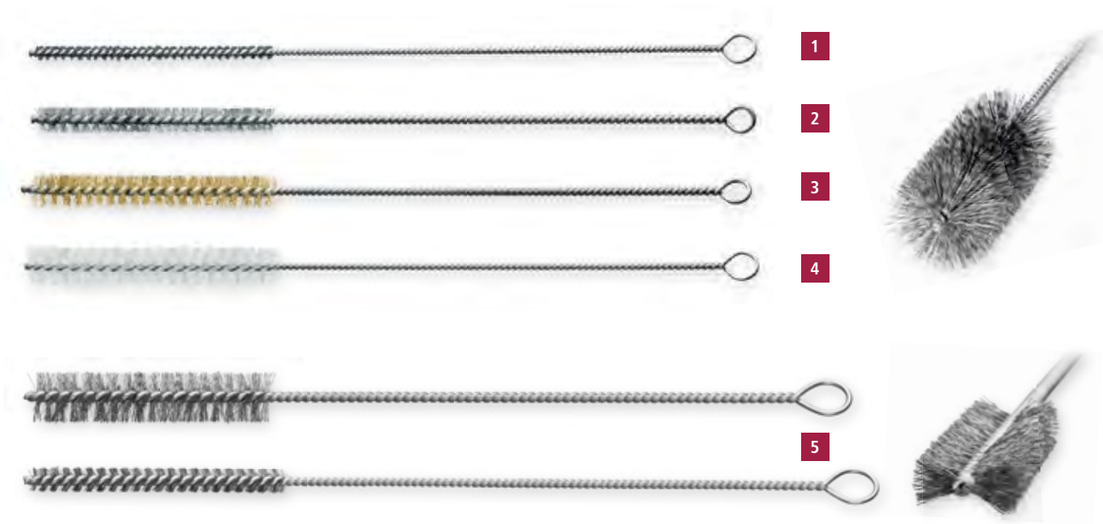

INTERIOR BRUSHES

Cylinder Brushes with Loop IBZ

D mm | *inch*	GL mm | *inch*	A mm | *inch*	Pack.	1 STA Art.-No.	2 ROF Art.-No.	3 MES Art.-No.	4 PA Art.-No.
3 | *1/8*	300 | *12*	100 | *4*	10	**542.381**	**542.541**	**542.741**	**542.881**
4 | *5/32*	300 | *12*	100 | *4*	10	**542.351**	**542.508**	**542.740**	**542.823**
5 | *13/64*	300 | *12*	100 | *4*	10	**542.347**	**542.538**	**542.739**	**542.822**
6 | *15/64*	300 | *12*	100 | *4*	10	**542.301**	**542.501**	**542.701**	**542.801**
8 | *5/16*	300 | *12*	100 | *4*	10	**542.302**	**542.502**	**542.702**	**542.802**
10 | *25/64*	300 | *12*	100 | *4*	10	**542.303**	**542.503**	**542.703**	**542.803**
12 | *15/32*	300 | *12*	100 | *4*	10	**542.304**	**542.504**	**542.704**	**542.804**
13 | *33/64*	300 | *12*	100 | *4*	10	**542.305**	*542.505*	**542.705**	available on demand
14 | *9/16*	300 | *12*	100 | *4*	10	**542.306**	*542.506*	**542.706**	**542.812**
15 | *19/32*	300 | *12*	100 | *4*	10	**542.307**	**542.507**	**542.707**	**542.807**
16 | *5/8*	300 | *12*	100 | *4*	10	**542.308**	available on demand	*542.708*	**542.808**
18 | *45/64*	300 | *12*	100 | *4*	10	**542.309**	*542.542*	**542.709**	**542.818**
20 | *51/64*	300 | *12*	100 | *4*	10	**542.311**	**542.511**	**542.711**	**542.811**
25 | *1*	300 | *12*	100 | *4*	10	**542.313**	**542.513**	**542.713**	**542.813**
30 | *1 3/16*	300 | *12*	100 | *4*	10	**542.315**	**542.515**	**542.715**	**542.815**
40 | *1 5/8*	300 | *12*	100 | *4*	10	**542.319**	*542.519*	**542.719**	**542.819**
50 | *2*	300 | *12*	100 | *4*	10	**542.320**	*542.520*	**542.720**	**542.820**

5 Cylinder brushes, flat filament with Loop IBZ

D mm | *inch*	GL mm | *inch*	A mm | *inch*	Pack.	STA 0,15 Art.-No.	STA 0,20 Art.-No.
4 x 10 | *5/32 x 25/64*	350 | 14	100 | *4*	10	**559.810**	
7 x 10 | 9/32 x 25/64	350 | 14	100 | *4*	10	**559.806**	
8 x 12 | 5/16 x 15/32	350 | 14	100 | *4*	10		**559.802**
8 x 15 | 5/16 x 19/32	350 | 14	100 | *4*	10		**559.803**
10 x 18 | 25/64 x 45/64	350 | 14	100 | *4*	10		**559.804**
10 x 22 | 25/64 x 7/8	350 | 14	100 | *4*	10		**559.805**
12 x 26 | 15/32 x 1 *1/32*	350 | 14	100 | *4*	10		**559.807**

Cylinder brushes (long version) with Loop IBZ

D mm | *inch*	GL mm | *inch*	A mm | *inch*	Pack.	STA Art.-No.	ROF Art.-No.	MES Art.-No.	PA Art.-No.
10 | 25/64	500 | 20	100 | 4	10	**547.303**	available on demand	**547.703**	**547.803**
15 | *19/32*	500 | 20	100 | 4	10	**547.307**	available on demand	**547.707**	**547.807**
20 | *51/64*	500 | 20	100 | 4	10	**547.311**	available on demand	**547.711**	**547.811**
25 | *1*	500 | 20	100 | 4	10	**547.313**	available on demand	**547.713**	**547.813**
30 | *1 3/16*	500 | 20	100 | 4	10	**547.315**	available on demand	**547.715**	**547.815**

Hole Cleaning Brushes

Hole cleaning Brushes with Wooden Handle IBM

	D mm | *inch*	GL mm | *inch*	A mm | *inch*	Pack.	1 STA Art.-No.	2 ROF Art.-No.	3 MES Art.-No.
	10 | *25/64*	300 | *12*	100 | *4*	10	**560.310**	**560.510**	**560.710**
	15 | *19/32*	300 | *12*	100 | *4*	10	**560.315**	**560.515**	**560.715**
	20 | *51/64*	300 | *12*	100 | *4*	10	**560.320**	**560.520**	**560.720**
	25 | *1*	300 | *12*	100 | *4*	10	**560.325**	**560.525**	**560.725**
	30 | *1 3/16*	300 | *12*	100 | *4*	10	**560.330**	**560.530**	**560.730**
4	10/18 | *25/64 / 45/64*	200 | *8*	70 | *2 3/4*	10	**561.304***		

* conical filling

5 Cylinder Brushes with Shank 8 mm Ø IBG

D mm | *inch*	GL mm | *inch*	A mm | *inch*	RPM max.	Pack.	STA Art.-No.
13 | *33/64*	200 | *8*	55 | *2 11/64*	1,000	10	**503.311**
20 | *51/64*	200 | *8*	55 | *2 11/64*	1,000	10	**503.313**
26 | *1 1/32*	200 | *8*	55 | *2 11/64*	800	10	**503.314**
32 | *1 17/64*	200 | *8*	55 | *2 11/64*	800	10	**503.316**
38 | *1 1/2*	200 | *8*	55 | *2 11/64*	800	10	**503.318**

Hole Cleaning Brushes
Those hole cleaning brushes have a wooden handle. Hence the brushes allow a very comfortable working in various application fields.

Typically the brushes are used in construction industry or handcraft business for cleaning bore holes or slots.

Besides, Hole Cleaning Brushes are ideal for cleaning threads or deburring cross holes.

The model 561.304 has the filling material conically cut.

Mechanical Application
Only use the brush with the indicated maximal peripheral speed (RPM max.). The max. RPM only is allowed when the brush is clamped min. for 10 mm into the tool. When the brush is inserted into the suitable work piece, higher RPMs are possible. **Only use the brush right rotating.**

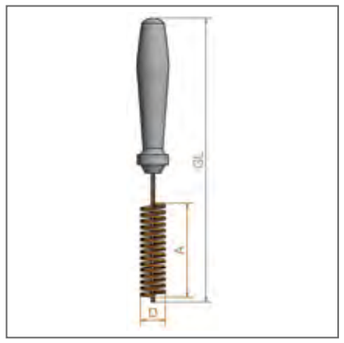

Bore Hole Cleaning Brushes

Interior Brushes for bore hole cleaning IBE, Steel, without Thread

D mm | *inch*	GL mm | *inch*	A mm | *inch*	Suitable for bore hole mm | *inch*	RPM max.	Pack.	STA 0.10 | *0.004"* Art.-No.	STA 0.15 | *0.006"* Art.-No.	STA 0.20 | *0.008"* Art.-No.
12 | *15/32*	130 | *5 1/8*	80 | *3*	10 | *25/64*	1,500	10	**504.301**		
14 | *9/16*	140 | *5 1/2*	80 | *3*	12 | *15/32*	1,500	10	**504.302**		
16 | *5/8*	180 | *7*	80 | *3*	14 | *9/16*	800	10		**504.333**	
20 | *51/64*	200 | *8*	100 | *4*	18 | *45/64*	800	10		**504.334**	
24 | *15/16*	220 | *8 5/8*	100 | *4*	22 | *7/8*	800	10		**504.335**	
26 | *1 1/32*	250 | *10*	100 | *4*	24 | *15/16*	500	10			**504.346**
28 | *1 7/64*	290 | *11 3/8*	100 | *4*	26 | *1 1/32*	500	10			**504.347**

Bore Hole Cleaning Brushes IBG, Stainless Steel, with Thread

D mm | *inch*	GL mm | *inch*	A mm | *inch*	Suitable for bore hole mm | *inch*	d	Pack.	ROF 0.10 | *0.004"* Art.-No.	ROF 0.15 | *0.006"* Art.-No.	ROF 0.20 | *0.008"* Art.-No.
12 | *15/32*	130 | *5 1/8*	80 | *3*	10 | *25/64*	M 6	10	**504.501.06**		
14 | *9/16*	140 | *5 1/2*	80 | *3*	12 | *15/32*	M 6	10	**504.502.06**		
16 | *5/8*	180 | *7*	80 | *3*	14 | *9/16*	M 6	10		**504.533.06**	
20 | *51/64*	200 | *8*	100 | *4*	18 | *45/64*	M 6	10		**504.534.06**	
24 | *15/16*	220 | *8 5/8*	100 | *4*	22 | *7/8*	M 6	10		*504.535.06*	
26 | *1 1/32*	250 | *10*	100 | *4*	24 | *15/16*	M 6	10			**504.546.06**
28 | *1 7/64*	290 | *11 3/8*	100 | *4*	26 | *1 1/32*	M 6	10			*504.547.06*

Bore Hole Cleaning Brushes
These interior brushes are used in the mounting techniques. The brushes are ideal for cleaning bore holes in most different materials. Afterwards screws and anchors can be inserted easily in the bore hole.

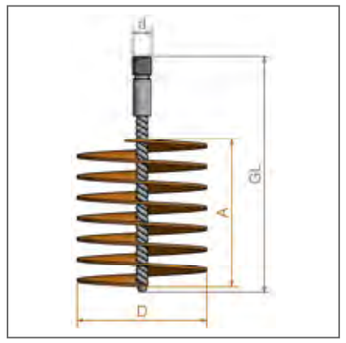

Item Nos. in bold are available ex stock.
Consider our minimum order value for *italic printed* article numbers (see page 152).

STA = steel wire
ROF = stainless steel wire
MES = brass wire

Tube and Sleeve Brushes

Interior Brushes
These brushes are varied for many different uses: not only for cleaning of tubes, gratings, sleeves and cylinders. Interior brushes regulate current velocity in tubing systems. They are similar to the double spiral tube brushes for deburring cross drillings etc. On these pages are shown standard brushes, single spiral having two drilling wires and the double spiral having four.

Sleeve Brushes
Sleeve brushes have a double spiral and are particularly stable types of tube brushes whose trimming is cut to a conical point. Used in machines they are beneficial for cleaning the sleeves (internal threads) of containers, e.g. after galvanisation.

Mechanical Application
Only use the brush with the indicated maximal peripheral speed (RPM max.). The max. RPM only is allowed when the brush is clamped min. for 10 mm into the tool. When the brush is inserted into the suitable work piece, higher RPMs are possible. **Only use the brush right rotating.**

Brushes with doublespiral
Brushes with a double spiral are mainly used for the treatment of larger diameters or for the treatment of hard materials. A double spiral is more stable and has a higher resistance against untwisting. Hence the brushes can be exposed to higher loads.

Stainless Steel Brushes
Information on working on stainless steel you find at www.lessmann.com

Special diameters
Minimum order € 125.00
Extra charge: Gross per piece
10 - 49 pcs + 50 %
50 - 99 pcs + 25 %
100 pcs and more + 10 %

Special threads under reserve
Extra charge: Gross per piece
10 - 19 pcs + € 5.00
20 - 49 pcs + € 4.00
50 - 99 pcs + € 3.00
100 pcs and more + € 2.00

Suitable thread adapter,
see on page 119
Handles and Extension Pieces
see on page 119

On request tube brushes are also available with other measurements, other filling materials or other threads.

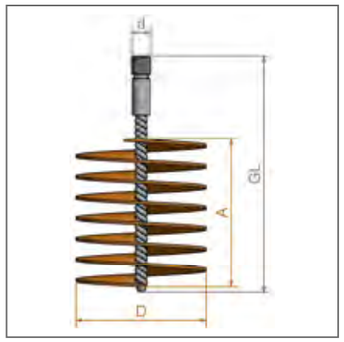

2-sided cropped
on request also 4-sided cropped

Item Nos. in bold are available ex stock.
Consider our minimum order value for *italic printed* article numbers (see page 152).

STA	= steel wire
ROF	= stainless steel wire
MES	= brass wire
PA	= polyamide
SIC	= silicon carbide bristles

Tube Brushes with external Thread IBG

D	GL	A	d	RPM	Pack.	1 STA crimped	1 ROF crimped	2 MES crimped	3 PA straight
Single Spirale						Art.-No.	Art.-No.	Art.-No.	Art.-No.
mm | *inch*	mm | *inch*	mm | *inch*							
6 | *15/64*	115 | *4 1/2*	80 | *3*	M 4	2,000	10	**501.301**	**501.501**	**501.701**	**501.801**
8 | *5/16*	115 | *4 1/2*	80 | *3*	M 6	3,000	10	**500.308**	**500.508**	**500.708**	**500.808**
10 | *25/64*	115 | *4 1/2*	80 | *3*	M 6	3,000	10	**500.310**	**500.510**	**500.710**	**500.810**
12 | *15/32*	115 | *4 1/2*	80 | *3*	M 6	3,000	10	**500.312**	**500.512**	**500.712**	**500.812**
13 | *33/64*	115 | *4 1/2*	80 | *3*	M 6	3,000	10	**500.313**	**500.513**	**500.713**	**500.813**
14 | *9/16*	115 | *4 1/2*	80 | *3*	M 6	3,000	10	**500.314**	**500.514**	**500.714**	**500.814**
15 | *19/32*	115 | *4 1/2*	80 | *3*	M 6	3,000	10	**500.315**	**500.515**	**500.715**	**500.815**
16 | *5/8*	115 | *4 1/2*	80 | *3*	M 6	3,000	10	**500.316**	**500.516**	**500.716**	**500.816**
18 | *45/64*	115 | *4 1/2*	80 | *3*	M 6	3,000	10	**500.318**	**500.518**	**500.718**	**500.818**
19 | *3/4*	115 | *4 1/2*	80 | *3*	M 6	3,000	10	**500.319**	**500.519**	**500.719**	**500.819**
20 | *51/64*	115 | *4 1/2*	80 | *3*	M 6	3,000	10	**500.320**	**500.520**	**500.720**	**500.820**

4 Interior Brushes with external thread IBG, Silicon Carbid Bristles

D	GL	A	d	RPM	Pack.	SIC 180/0.9
Single Spirale						Art.-No.
mm | *inch*	mm | *inch*	mm | *inch*				
10 | *25/64*	115 | *4 1/2*	80 | *3*	M 6	4,000	10	*500.010*
16 | *5/8*	115 | *4 1/2*	80 | *3*	M 6	4,000	10	*500.016*
20 | *51/64*	150 | *6*	100 | *4*	W 1/2"	3,500	10	**502.050.24**
22 | *7/8*	150 | *6*	100 | *4*	W 1/2"	3,500	10	*502.052.24*
25 | *1*	150 | *6*	100 | *4*	W 1/2"	3,500	10	*502.055.24*
28 | *1 7/64*	150 | *6*	100 | *4*	W 1/2"	3,500	10	*502.058.24*

We offer one for the tube brushes corresponding handle on page 119

For all brushes with thread M 6, M 10, W 1/2" and W 3/8" a practical hanger assembly is available for presenting the brushes individually. More information you find on page 129.

Tube/Sleeve brushes

Tube Brushes with external Thread W 1/2"

				1	2	3	4	5	
				Single Spirale IBG				Double Spirale IBGD	
D	GL	A	Pack.	RPM	STA straight	ROF straight	MES crimped	PA straight	RPM	STA straight
mm	mm	mm	mm	max.	Art.-No.	Art.-No.	Art.-No.	Art.-No.	max.	Art.-No.
20	150	100	10	2,500	**502.120.24**	**502.420.24**	**502.720.24**	**502.820.24**	2,000	**522.120.24**
22	150	100	10	2,500	**502.122.24**	**502.422.24**	**502.722.24**	**502.822.24**	2,000	**522.122.24**
25	150	100	10	2,500	**502.125.24**	**502.425.24**	**502.725.24**	**502.825.24**	2,000	**522.125.24**
28	150	100	10	2,500	**502.128.24**	**502.428.24**	**502.728.24**		2,000	**522.128.24**
30	160	100	10	1,000	**506.130**	**506.430**	**506.730**	**506.830**	1,500	**526.130**
32	160	100	10	1,000	**506.132**	**506.432**	**506.732**	**506.832**	1,500	**526.132**
35	160	100	10	1,000	**506.135**	**506.435**	**506.735**	**506.835**	1,500	**526.135**
38	160	100	10	1,000	**506.138**	**506.438**	**506.738**	**506.838**	1,500	**526.138**
40	160	100	10	1,000	**506.140**	**506.440**	**506.740**	**506.840**	1,500	**526.140**
44	160	100	5	1,000	**506.144**	**506.444**	**506.744**	**506.844**	1,500	**526.144**
50	160	100	5	1,000	**506.150**	**506.450**	**506.750**	**506.850**	1,500	**526.150**
57	160	100	5	1,000	**506.157**	**506.457**	**506.757**	**506.857**	1,500	**526.157**
63	160	100	5	1,000	**506.163**	**506.463**	**506.763**	**506.863**	1,500	**526.163**
69	160	100	5	1,000	**506.169**	*506.469*	**506.769**	**506.869**	1,500	**526.169**
75	160	100	5	1,000	**506.175**	**506.475**	**506.775**	**506.875**	1,500	**526.175**
82	160	100	5	1,000	**506.182**	**506.482**	**506.782**	**506.882**	1,500	**526.182**
88	160	100	5	1,000	**506.188**	*506.488*	*506.788*	**506.888**	1,500	**526.188**
94	160	100	5	1,000	**506.194**	*506.494*	*506.794*	**506.894**	1,500	**526.194**
101	160	100	5	1,000	**506.101**	**506.401**	**506.701**	**506.801**	1,500	**526.101**
125	160	100	5	1,000	**506.106**	*506.406*	**506.706**	*506.806*	1,500	**526.106**
150	160	100	5	1,000	**506.211**	*506.411*	*506.711*	*506.811*	1,000	*526.111*
200	160	100	5	1,000	**506.220**	available on demand	*506.720*	*506.820*	1,000	available on demand

Mechanical Application
Only use the brush with the indicated maximal peripheral speed (RPM max.). The max. RPM only is allowed when the brush is clamped min. for 10 mm into the tool. When the brush is inserted into the suitable work piece, higher RPMs are possible. **Only use the brush right rotating.**

We offer one for the tube brushes corresponding handle on page 119

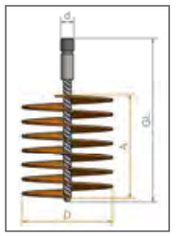

Item Nos. in bold are available ex stock.
Consider our minimum order value for *italic printed* article numbers (see page 152).

STA	= steel wire
ROF	= stainless steel wire
MES	= brass wire
PA	= polyamide

Tube Brushes with internal Thread / Boiler Brushes IBG

	B	D	Format	GL	A	d	RPM	Pack.	STA straight	PA straight
	mm | *inch*	mm | *inch*		mm | *inch*	mm | *inch*		max.		Art.-No.	Art.-No.
	Single Spirale									
1		30 | *1 3/16*	⊙	160 | *6 1/4*	100 | *4*	M 10i	1,000	10	*506.130.60*	
1		40 | *1 5/8*	⊙	160 | *6 1/4*	100 | *4*	M 10i	1,000	10	*506.140.60*	
1		50 | *2*	⊙	160 | *6 1/4*	100 | *4*	M 10i	1,000	10	*506.150.60*	
1		60 | *2 3/8*	⊙	160 | *6 1/4*	100 | *4*	M 10i	1,000	10	*506.160.60*	
1		80 | *3*	⊙	160 | *6 1/4*	100 | *4*	M 10i	1,000	10	*506.180.60*	
1		90 | *3 1/2*	⊙	160 | *6 1/4*	100 | *4*	M 10i	1,000	10	**507.190**	
1		101 | *4*	⊙	160 | *6 1/4*	100 | *4*	M 10i	1,000	10	*506.101.60*	
1		120 | *4 3/4*	⊙	160 | *6 1/4*	100 | *4*	M 10i	1,000	10	**507.105**	*506.805.60*
2	20 | *51/64*	30 | *1 3/16*	⊙	140 | *5 1/2*	80 | *3*	M 10i		10	**533.405**	
2	15 | *19/32*	30 | *1 3/16*	⊙	160 | *6 1/4*	100 | *4*	M 10i		10	*533.408*	
2	30 | *1 3/16*	50 | *2*	⊙	160 | *6 1/4*	100 | *4*	M 10i		10	*532.218.60*	
2	40 | *1 5/8*	90 | *3 1/2*	⊙	160 | *6 1/4*	100 | *4*	M 10i		10	*532.214.60*	
2	50 | *2*	100 | *4*	⊙	160 | *6 1/4*	100 | *4*	M 10i		10	*532.303.60*	

Suitable back board brushes you find at page 113.

⊙ round | ⊙ 2-sided cropped | on request also 4-sided cropped

Sleeves Brushes Conical, without Thread

	D	GL	A	RPM	Pack.	Single Spirale IBE STA crimped	Double Spirale IBD STA straight
	mm | *inch*	mm | *inch*	mm | *inch*	max.		Art.-No.	Art.-No.
3	10-20 | *25/64 - 51/64*	170 | *6 3/4*	100 | *4*	1,000	10	**541.372**	**549.101**
3	15-25 | *19/32 - 1*	170 | *6 3/4*	100 | *4*	1,000	10	**540.321**	**549.102**
3	20-30 | *51/64 - x 1 3/16*	170 | *6 3/4*	100 | *4*	1,000	10	**541.373**	**549.103**
3	25-35 | *1 - 1 3/8*	170 | *6 3/4*	100 | *4*	1,000	10	**540.323**	**549.104**
3	32-42 | *1 17/64 -1 5/8*	170 | *6 3/4*	100 | *4*	1,000	5	**540.324**	**549.105**
3	40-50 | *1 5/8 - 2*	170 | *6 3/4*	100 | *4*	1,000	5	**540.325**	**549.106**
3	38-70 | *1 1/2 - 2 3/4*	170 | *6 3/4*	100 | *4*	1,000	5	*540.225*	**549.107**
3	60-95 | *2 3/8 - 3 3/4*	170 | *6 3/4*	100 | *4*	1,000	5	**540.327**	**549.108**

On request also tube and sleeve brushes with crimped wire are available.

Boiler Brushes / Stove Pipe Brushes

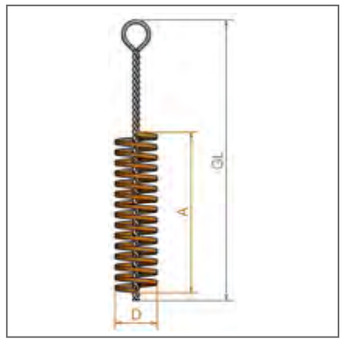

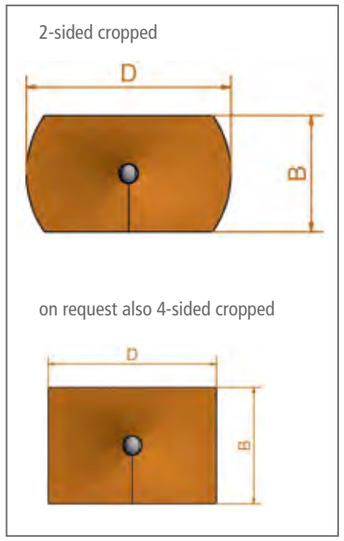

Boiler Brushes
The systematic care of boilers and regular cleaning by brushing increases the boiler efficiency and reduces toxic emissions.

LESSMANN boiler brushes are of outstanding quality made using the best materials and precise manufacturing procedures. Our current programme includes brushes in standard dimensions and special executions. As OEM supplier to important boiler manufacturers we are able to produce large quantities in an efficient way. What is even more important is our know how in meeting the critical tolerances demanded by our customers.

Stove Pipe Brushes
The stove pipe brushes are available in two different executions: with twisted handle (brush and handle one part) or with thread nipple, for screwing and lengthing by using a separate handle.

Handles and Extension Pieces
For tube brushes, boiler brushes and stove pipe brushes, see pages 111 - 113, 114 - 118. The twisted handles have an internal thread and a grip loop, the extension pieces have both an internal thread and an external thread.

Suitable Thread Adapters
see page 119

Item Nos. in bold are available ex stock.
Consider our minimum order value for *italic printed* article numbers (see page 152).

STA = steel wire
PA = polyamide

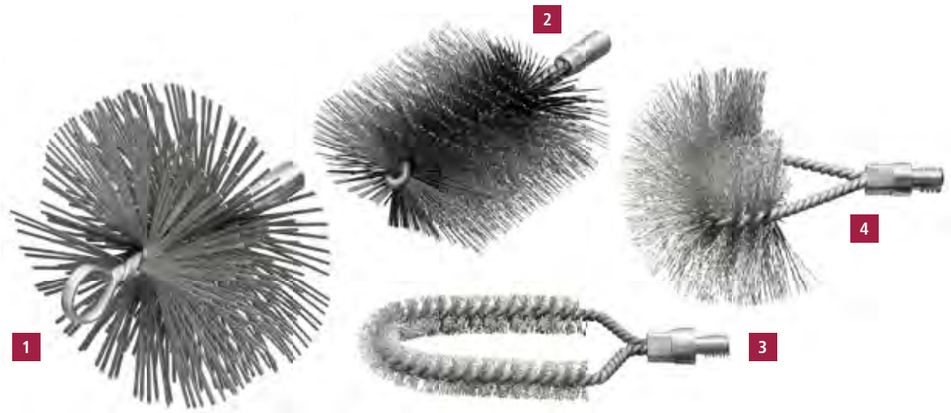

EAN **1 Chimney Brushes with Eye and internal Thread IBZG, Flat Wire 2.0 x 0.40**

Filling	D	GL	A	Internal Thread d	Pack	Art.-No.	Filling	D	GL	A	Internal Thread	Pack	Art.-No.
STA flat	125	160	55	M 12 i	1	**507.007**	**STA** flat	250	160	55	M 12 i	1	**507.004**
STA flat	150	160	55	M 12 i	1	**507.001**	**STA** flat	300	160	55	M 12 i	1	**507.005**
STA flat	175	160	55	M 12 i	1	**507.002**	**STA** flat	350	160	55	M 12 i	1	**507.006**
STA flat	200	160	55	M 12 i	1	**507.003**							

Boiler Brushes with external Thread IBG, Steel Wire, rectangular/curved

	Filling	B mm | *inch*	D mm | *inch*	Format	GL mm | *inch*	A mm | *inch*	d	Pack.	Art.-No.
2	**PA** straight	30 | *1 3/16*	50 | *2*	•	160 | *6 3/8*	100 | *4*	W 1/2"	5	**533.008.24**
2	**PA** straight	50 | *2*	100 | *4*	•	160 | *6 3/8*	100 | *4*	W 1/2"	5	*533.010.24*
2	**STA** straight	30 | *1 3/16*	50 | *2*	•	160 | *6 3/8*	100 | *4*	W 1/2"	5	**532.218**
2	**STA** straight	30 | *1 3/16*	80 | *3*	•	160 | *6 3/8*	100 | *4*	W 1/2"	5	**532.211**
2	**STA** straight	40 | *1 5/8*	80 | *3*	•	160 | *6 3/8*	100 | *4*	W 1/2"	5	**532.202**
2	**STA** straight	50 | *2*	100 | *4*	•	160 | *6 3/8*	100 | *4*	W 1/2"	5	**532.203**
2	**STA** straight	50 | *2*	120 | *4 3/4*	•	160 | *6 3/8*	100 | *4*	W 1/2"	5	**532.205**
3	**STA** crimped	18 | *45/64*	70 | *2 3/4*	curved	160 | *6 3/8*	100 | *4*	W 1/2"	5	**529.301.24**
3	**STA** crimped	30 | *1 3/16*	80 | *3*	curved	175 | *6 7/8*	120 | *4 3/4*	W 1/2"	5	**529.302**
4	**STA** crimped	80 | *3*	150 | *6*	curved	150 | *6*	120 | *4 3/4*	W 1/2"	5	**529.311**
4	**PA** straight	80 | *3*	150 | *6*	curved	150 | *6*	120 | *4 3/4*	W 1/2"	5	*529.811*
4	**STA** crimped	80 | *3*	150 | *6*	curved	150 | *6*	120 | *4 3/4*	M 10i	5	*529.301.60*

• 2-sided cropped
on request also 4-sided cropped

Boiler Brushes

1 2 3

Boiler Brushes with Handle IBE

	Filling	B mm | *inch*	D mm | *inch*	Format	GL mm | *inch*	A mm | *inch*	Pack.	Art.-No.
1	**PA** straight		20 | *51/64*	⊙	600 | *23 5/8*	100 | *4*	10	**544.804**
2	**STA** crimped		50 | *2*	⊙	700 | *27 1/2*	100 | *4*	10	**544.301**
2	**STA** crimped		90 | *3 1/2*	⊙	600 | *23 5/8*	100 | *4*	10	**544.302**
2	**STA** crimped		10 | *25/64*	⊙	850 | *33 1/2*	100 | *4*	10	**545.320**
2	**STA** crimped		15 | *19/32*	⊙	850 | *33 1/2*	100 | *4*	10	*545.321*
2	**STA** crimped		20 | *51/64*	⊙	850 | *33 1/2*	100 | *4*	10	**545.322**
2	**STA** crimped		25 | *1*	⊙	850 | *33 1/2*	100 | *4*	10	**545.307**
2	**STA** crimped		35 | *1 3/8*	⊙	850 | *33 1/2*	100 | *4*	10	**545.311**
2	**STA** crimped		50 | *2*	⊙	850 | *33 1/2*	100 | *4*	10	**545.312**
2	**STA** crimped		60 | *2 3/8*	⊙	850 | *33 1/2*	100 | *4*	10	**545.338**
3	**PA** straight	12 | *15/32*	14 | *9/16*	⬭	600 | *23 5/8*	150 | *6*	10	**554.903**
3	**STA** straight	17 | *43/64*	50 | *2*	⬭	960 | *38*	60 | *2 3/8*	10	**564.101****
3	**STA** crimped	30 | *1 3/16*	50 | *2*	⬭	800 | *31 1/2*	100 | *4*	10	**551.801**
3	**STA** crimped	40 | *1 5/8*	50 | *2*	⬭	1,000 | *39 3/8*	80 | *3*	10	**553.711**
3	**STA** straight	40 | *1 5/8*	80 | *3*	⬭	1,000 | *39 3/8*	100 | *4*	10	**552.404**
3	**STA** crimped	40 | *1 5/8*	90 | *3 1/2*	⬭	1,000 | *39 3/8*	80 | *3*	10	**564.301***
3	**STA** straight	50 | *2*	100 | *4*	⬭	1,000 | *39 3/8*	100 | *4*	10	**552.403**

* Rod made from spring steel 5 Ø | ** with scooped scratcher in the handle

⬭ 2-sided cropped | on request also 4-sided cropped

⊙ round

Item Nos. in bold are available ex stock.
Consider our minimum order value for *italic printed* article numbers (see page 152).

STA = steel wire
PA = polyamide

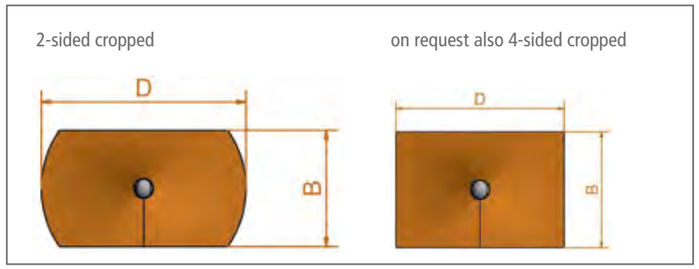

Boiler Brushes-Sets

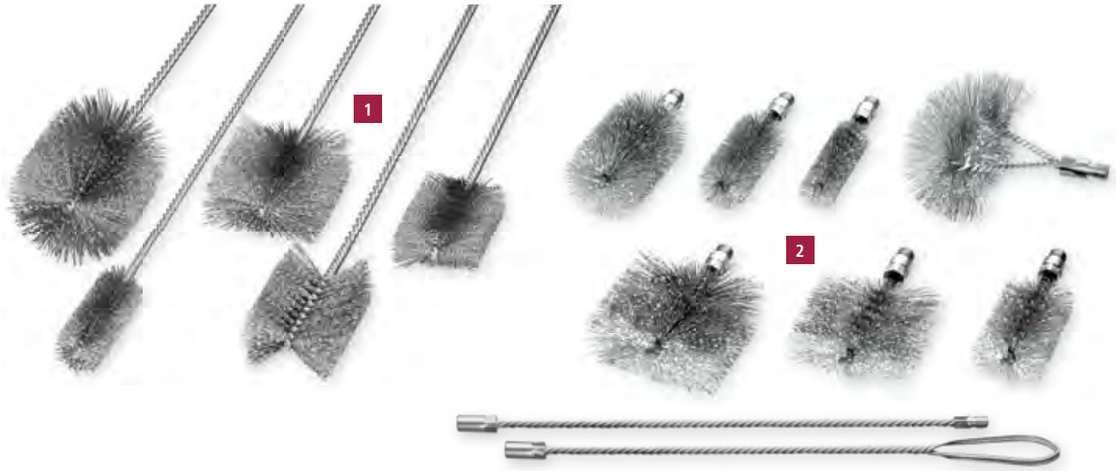

1 2

EAN **1 Brush Set, 5 pieces**

Content: 1 piece each	A	Format	Set with handle, big edition, steel wire: Art.-No.	B	D	GL	Art.-No. Set	Set with handle, small edition, steel wire: Art.-No.	B	D	GL	Art.-No. Set
Cylinder Brush	100	⊙	545.303		38	1.000	**599.921**	544.307		15	600	**599.931**
Cylinder Brush	100	⊙	545.331		100	1.000		544.361		25	800	
Boiler Brush	100	⬭	552.811	30	70	1.000		559.831	31	20	600	
Boiler Brush	100	⬭	552.816	50	100	1.000		551.811	30	20	500	
Boiler Brush	100	flat filament	559.713	75	30	1.000		551.812	50	40	700	

EAN **2 Brush Set, Steel Wire, external Thread W 1/2", crimped, 9 pieces**

Content: 1 piece each		B mm | *inch*	D mm | *inch*	GL mm | *inch*	A mm | *inch*	Format	Art.-No. Set
506.330	Interior Brushes		30 | *1 3/16*	160 | *6 1/4*	100 | *4*	⊙	**599.962**
506.340	Interior Brushes		40 | *1 5/8*	160 | *6 1/4*	100 | *4*	⊙	
506.363	Interior Brushes		63 | *2 1/2*	160 | *6 1/4*	100 | *4*	⊙	
532.718	Boiler Brush	30 | *1 3/16*	50 | x *2*	160 | *6 1/4*	100 | *4*	⬭	
532.716	Boiler Brush	30 | *1 3/16*	90 | *3 1/2*	160 | *6 1/4*	100 | *4*	⬭	
532.703	Boiler Brush	50 | *2*	100 | *4*	160 | *6 1/4*	100 | *4*	⬭	
529.311	Back board brush	80 | *3*	150 | *6*	150 | *6*			
567.671	Handle with Eye			500 | *20*			
567.771	Extension			500 | *20*			

EAN **Brush Set, Polyamide Bristles, external Thread W 1/2", crimped, 9 pieces**

Content: 1 piece each		B mm | *inch*	D mm | *inch*	GL mm | *inch*	A mm | *inch*	Format	Art.-No. Set
506.838	Interior Brushes		38 | *1 1/2*	160 | *6 1/4*	100 | *4*	⊙	**599.991**
506.855	Interior Brushes		55 | *2 1/4*	160 | *6 1/4*	100 | *4*	⊙	
506.860	Interior Brushes		60 | *2 3/8*	160 | *6 1/4*	100 | *4*	⊙	
533.008.24	Boiler Brush	30 | *1 3/16*	50 | *2*	160 | *6 1/4*	100 | *4*	⬭	
533.009.24	Boiler Brush	30 | *1 3/16*	90 | *3 1/2*	160 | *6 1/4*	100 | *4*	⬭	
533.010.24	Boiler Brush	50 | *2*	100 | *4*	160 | *6 1/4*	100 | *4*	⬭	
529.811	Back board brush	80 | *3*	150 | *6*	150 | *6*			
567.671	Handle with Eye			500 | *20*			
567.771	Extension			500 | *20*			

Stove Pipe Brushes

Stove Pipe Brushes with Twisted Handle IBZ

	Filling	D mm | *inch*	GL mm | *inch*	A mm | *inch*	Pack.	Art.-No.
1	**STM**	130 | *5 1/8*	2,000 | *78 3/4*	200 | *8*	10	**546.302**
1	**STM**	130 | *5 1/8*	3,000 | *118*	200 | *8*	10	**546.304**
1	**STM**	150 | *6*	2,000 | *78 3/4*	200 | *8*	10	**546.306**
1	**STM**	180 | *7*	2,000 | *78 3/4*	200 | *8*	10	**546.314**
1	**STM**	200 | *8*	2,000 | *78 3/4*	200 | *8*	10	**546.318**
2	**BAS**	150 | *6*	2,000 | *78 3/4*	200 | *8*	10	**546.906**
2	**BAS**	150 | *6*	3,000 | *118*	200 | *8*	10	**546.908**

Delivery only in noted packaging unit. If you need smaller quantities, please order stove pipe brushes with separate handle.

3 Stove Pipe Brushes with separate Handle IBZG

Filling	D mm | *inch*	GL mm | *inch*	A mm | *inch*	d	Pack.	Art.-No.
STM	80 | *3*	275 | *10 7/8*	200 | *8*	M 10	5	**507.307**
STM	100 | *4*	275 | *10 7/8*	200 | *8*	M 10	5	**507.308**
STM	130 | *5 1/8*	275 | *10 7/8*	200 | *8*	M 10	5	**507.301**
STM	150 | *6*	275 | *10 7/8*	200 | *8*	M 10	5	**507.302**
STM	160 | *6 3/8*	275 | *10 7/8*	200 | *8*	M 10	5	**507.303**
STM	180 | *7*	275 | *10 7/8*	200 | *8*	M 10	5	**507.304**
STM	200 | *8*	275 | *10 7/8*	200 | *8*	M 10	5	**507.305**
BAS	150 | *6*	275 | *10 7/8*	200 | *8*	M 10	5	**507.959**

Item Nos. in bold are available ex stock.
Consider our minimum order value for *italic printed* article numbers (see page 152).

STM = brass coated steel
BAS = bassine black

Accessories

Handle with Eye

	GL mm | *inch*	d	Format	Pack.	Art.-No.
1	400 | *16*	External M 10	round steel, straight	1	**568.805**
1	800 | *31 1/2*	External M 10	round steel, straight	1	**568.802**
1	1,000 | *40*	External M 10	round steel, straight	1	**568.806**
EAN 2	1,000 | *40*	Internal M 4	twisted wire	1	**566.603**
EAN 2	1,000 | *40*	Internal M 6	twisted wire	1	**566.601**
EAN 2	1,000 | *40*	Internal M 10	twisted wire	1	**566.602**
EAN 2	1,000 | *40*	External M 12	twisted wire	1	**567.201**
2	500 | *20*	Internal W 1/2"	twisted wire	1	**567.671**
EAN 2	1,000 | *40*	Internal W 1/2"	twisted wire	1	**567.601**

3 Extension

	GL mm | *inch*	d	Format	Pack.	Art.-No.
EAN	1,000 | *40*	Internal / External M 4	twisted wire	1	**566.703**
EAN	1,000 | *40*	Internal / External M 6	twisted wire	1	**566.701**
EAN	1,000 | *40*	Internal / External M 10	twisted wire	1	**566.702**
EAN	1,000 | *40*	Internal / External M 12	twisted wire	1	**567.731**
	500 | *20*	Internal / External W 1/2"	twisted wire	1	**567.771**
EAN	1,000 | *40*	Internal / External W 1/2"	twisted wire	1	**567.701**

EAN **Adapter Threads**

			GL mm | *inch*	Pack.	Art.-No.
4	Internal W 1/2"	Internal M 12	40 | *1 3/8*	1	**001.211**
4	Internal W 1/2"	Internal M 10	40 | *1 3/8*	1	**001.212**
4	Internal W 3/8"	Internal M 10	40 | *1 3/8*	1	*001.215*
4	External M 10	Internal W 1/2"	40 | *1 3/8*	1	**001.222**
4	External M 10	Internal W 3/8"	40 | *1 3/8*	1	**001.225**
5	Internal W 1/2"	Shank Ø 6 mm	50 | *2*	1	**000.071**
5	Internal M 6	Shank Ø 6 mm	50 | *2*	1	**000.072**
6	Internal W 1/2"		155 | *6*	1	**599.002**
6	Internal M 6		130 | *5 1/8*	1	**599.001**

Fitting Brushes

EAN

Interior Fitting Brushes IBM

D mm | *inch*	GL	A	Filling Material	Pack.	Art.-No.
8 | *5/16*	185	12	**ROF** 0.10 | *0.004"*	10	**562.508**
10 | *25/64*	185	12	**ROF** 0.10 | *0.004"*	10	**562.510**
12 | *15/32*	185	15	**ROF** 0.10 | *0.004"*	10	**562.512**
15 | *19/32*	185	20	**ROF** 0.15 | *0.006"*	10	**562.515**
18 | *45/64*	185	20	**ROF** 0.15 | *0.006"*	10	**562.518**
22 | *7/8*	185	25	**ROF** 0.20 | *0.008"*	10	**562.522**
28 | *1 7/64*	185	25	**ROF** 0.20 | *0.008"*	10	**562.528**
35 | *1 3/8*	185	25	**ROF** 0.20 | *0.008"*	10	**562.535**

Fitting Brushes
With designed two-components handle
For the inner cleaning in tubes in gas, water and climatic conditions. We use only stainless steel wire as the filling material for these brushes. This prevents long-term damage by material deposit in tubes.

Recommendation for users: When using interior fitting brushes, please only use brushes with stainless steel wire. This will avoid pitting by the use of rusting wire parts.

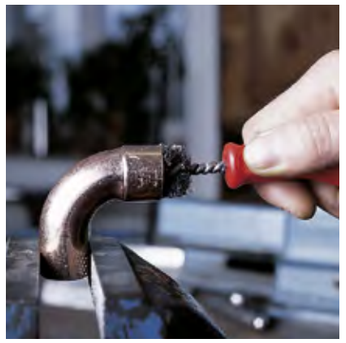

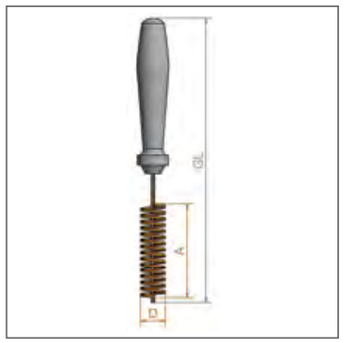

Item Nos. in bold are available ex stock.
Consider our minimum order value for *italic printed* article numbers (see page 152).

STA = steel wire
ROF = stainless steel wire
PP = polyprophylene

Brushes and Scratcher

1 Battery Terminal Brushes

Filling Material	D mm | *inch*	GL mm | *inch*	A mm | *inch*	Pack.	Art.-No.
STA	17+24 | *43/64+15/16*	120/180 | *4 3/4 / 7*	60 | *2 3/8*	12	**563.301***

2 Soluble Oil Brushes

Filling Material	Ø Bundle mm | *inch*	GL mm | *inch*	H mm | *inch*	Pack.	Art.-No.
mixed hair	7 | *9/32*	150 | *6*	40 | *1 5/8*	100	**570.907**
mixed hair	10 | *25/64*	240 | *9 1/2*	55 | *2 1/4*	100	**570.910**

3 Soldering Fluid Brushes

Filling Material	D mm | *inch*	GL mm | *inch*	H mm | *inch*	Pack.	Art.-No.
bristles	10 | *25/64*	123 | *4 7/8*	20 | *51/64*	100	**045.910**
bristles	15 | *19/32*	140 | *5 1/2*	25 | *1*	100	**045.915**
STA	20 | *51/64*	205 | *8 5/64*	30 | *1 1/4*	200	**045.301**

4 Rust Scratcher

Filling Material	D mm | *inch*	GL mm | *inch*	H mm | *inch*	Pack.	Art.-No.
STA straight 0.23	5/8 | *13/64 / 5/16*	100 | *4*	6 | *15/64*	180	**184.101**
STA Straight 0.23 | *0.009"* + **PP** 0.15 | *0.006"*	5/8 | *13/64 / 5/16*	100 | *4*	6+15 | *15/64 + 19/32*	180	*184.104*

* conical filling

5 End Brush mutual filled

	D mm | *inch*	GL mm | *inch*	H mm | *inch*	Pack.	Art.-No.
ROF straight 0.30 + **spring steel strip** 6.4 x 0.8	15 | *19/32*	180 | *7*	22/25 | *7/8/1*	100	*184.412*

Battery Terminal Brushes
For cleaning of battery terminals. The twisted brush is conical filled for cleaning connection terminals of the battery cable. To clean the battery terminals use the ringshaped filed cards stuck in the handle.

Soluble Oil Brushes
With twisted wire handle for workshop use.

Soldering Fluid Brushes
The handle is made of tinned metal.

End brush with double-sided filling
End brushes with double-sided filling can be used for the manual removement of zinc ash without harming the zinc surface. Zinc ash is the result of oxidation on the surface of zinc baths. This happens usually on the edges of steelgirders with head and base plates.
The spring steel strip on the one end of the end brush is used to remove more solid parts of dirt, whereas the with stainless steel wire filled other side of the brush can be used to remove the remaining dirt.

LESSMANN®
THE GERMAN BRUSH COMPANY

D.I.Y. BRUSHES AND SALES PROMOTION

Do It Yourself Brushes

D.I.Y Brushes with Shank
Do It Yourself brushes are an excellent alternative to the professional tools previously shown in this catalogue. Available are cup brushes from diameter 50 - 75 mm, wheel brushes diameter 50 - 100 mm, end brushes and cylinder brushes.

Stainless Steel Brushes
Information on working on stainless steel you find at www.lessmann.com

Attractive assortment
Coarse and fine steel wire, brass wire and abrasive filaments are available as filling materials.

The brushes are packed in small display cartons, 10 pieces per carton.

We offer different packaging to present these and other common brushes with shanks in specialist shops.

Item Nos. in bold are available ex stock.
Consider our minimum order value for *italic printed* article numbers (see page 152).

STA	= steel wire, crimped
ROF	= stainless steel wire
MES	= brass wire, crimped
SIC	= brass wire

1 Wheel Brushes with Shank 6 mm Ø

D mm | *inch*	A mm | *inch*	RPM max.	Pack.	STA 0.20 | *0.008"* Art.-No.	STA 0.30 | *0.012"* Art.-No.	ROF 0.20 | *0.008"* Art.-No.	ROF 0.30 | *0.012"* Art.-No.
50 | *2*	8-10 | *3/8*	4,500	10	**410.122**	**410.123**		
75 | *3*	8-10 | *3/8*	4,500	10	**410.132**	**410.133**	**410.134**	**410.135**
75 | *3*	14-16 | *5/8*	4,500	10		**410.173**		
100 | *4*	8-10 | *3/8*	4,500	10	**410.152**	**410.153**	**410.154**	**410.155**
100 | *4*	14-16 | *5/8*	4,500	10		**410.183**		**410.185**

						2	
D mm | *inch*	A mm | *inch*	RPM max.	Pack.	MES 0.20 | *0.008"* Art.-No.	MES 0.25 | *0.010"* Art.-No.	SIC 80/1.2 Art.-No.	SIC 180/0.9 Art.-No.
75 | *3*	8-10 | *3/8*	4,500	10		**410.136**	**410.138**	
100 | *4*	8-10 | *3/8*	4,500	10	**410.156**		**410.158**	*410.159*

3 Cup Brushes with Shank 6 mm Ø

D mm | *inch*	RPM max.	Pack.	STA 0.20 | *0.008"* Art.-No.	STA 0.30 | *0.012"* Art.-No.	ROF 0.20 | *0.008"* Art.-No.	ROF 0.30 | *0.012"* Art.-No.
50 | *2*	4,500	10	**430.122**	**430.123**	**430.124**	**430.125**
75 | *3*	4,500	10	**430.132**	**430.133**	**430.134**	**430.135**

				4	
D mm | *inch*	RPM max.	Pack.	MES 0.30 | *0.012"* Art.-No.	SIC 80/1.2 Art.-No.	SIC 320/0.6 Art.-No.
50 | *2*	4,500	10	**430.126**	**430.128**	**430.129**
75 | *3*	4,500	10	**430.136**	**430.138**	**430.139**

5 End Brushes with Shank 6 mm Ø

D mm | *inch*	RPM max.	Pack.	STA 0.30 | *0.012"* Art.-No.	SIC 80/1.2 Art.-No.
25 | *1*	12,000	10	**455.161**	**453.821**

6 Cylinder Brushes with Shank 6 mm Ø

D mm | *inch*	RPM max.	Pack.	STA 0.30 | *0.012"* Art.-No.
28 | *1*	1,500	10	**541.301**

7 D.I.Y. Wheel Brushes with bore

D mm | *inch*	A mm | *inch*	d	RPM max.	Pack.	STA 0.35 | *0.014"* Art.-No.
75 | *3*	10 | *3/8*	1/2"	4,500	10	**300.102**
100 | *4*	10 | *3/8*	1/2"	4,500	10	**320.102**

Packing and Sales Promotion

Brushes with blister packing
All standard brushes for drilling machines and angle grinders are available with blister packing. The blister packing is available with attractive labels with information about technical data and EAN-bar code. The clam shells emphasize the brushes' value, protect them and provide good visible presentation.

On request we can arrange your individual private label solution.

Technical data on front, details and EAN on back: Blister Packing

EAN **Brushes for Angle Grinders in Blister Packaging**

	D	Thread	**STH 0.35** | *0.014"*	**STH 0.50** | *0.020"*	**ROH 0.30** | *0.012"*	**ROH 0.50** | *0.020"*	**STA 0.35** | *0.014"*
	mm | *inch*	mm | *inch*	Art.-No.	Art.-No.	Art.-No.	Art.-No.	Art.-No.
Knot Cup Brushes	65 | *2 1/2*	M 14	*482.117.09*	*482.217.09*		*482.817.09*	
	65 | *2 1/2*	M 10		*482.214.09*			
Knot Wheel Brushes	115 | *4 1/2*	Bo. 22.2 | *7/8*		*472.211.09*		*472.811.09*	
	115 | *4 1/2*	M 14		*472.217.09*			
Knot Bevel Brushes	100 | *4*	M 14		*471.257.09*			
	115 | *4 1/2*	M 14		*472.257.09*		*472.857.09*	
Cup Brushes crimped	60 | *2 3/8*	M 14			*421.367.09*		*421.167.09*
	60 | *2 3/8*	M 10					*421.164.09*
	75 | *3*	M 14					*423.167.09*
Conical Brushes crimped	100 | *4*	M 14					*422.177.09*

EAN **Brushes for Grinders and Drilling Machines with Shank 6 mm Ø in Blister Packaging**

	D	**STH 0.35** | *0.014"*	**STH 0.50** | *0.020"*	**ROH 0.35** | *0.014"*
	mm | *inch*	Art.-No.	Art.-No.	Art.-No.
Knot End Brushes	19 | *3/4*	*453.278.09*		
	22 | *7/8*			*454.378.09*
Knot Wheel Brushes	75 | *3*		*417.198.09*	

EAN **D.I.Y. Brushes for Grinders and Drilling Machines with Shank 6 mm Ø in Blister Packaging**

	D	**STA 0.25** | *0.010"*	**STA 0.30** | *0.012"*	**ROF 0.30** | *0.012"*	**MES 0.25** | *0.010"*	**SIC 80/1.2**
	mm | *inch*	Art.-No.	**0.35** | *0.014"* Art.-No.	Art.-No.	Art.-No.	Art.-No.
Wheel Brushes	50 | *2*		*410.123.09*			
	75 | *3*		*410.133.09*	*410.135.09*	*410.136.09*	*410.138.09*
	100 | *4*	*410.152.09*	*410.153.09*			*410.158.09*
Cup Brushes	50 | *2*	*430.122.09*	*430.123.09*		*430.126.09*	*430.128.09*
	75 | *3*		*430.133.09*			*430.138.09*
End Brushes	25 | *1*		*455.161.09*			
Cylinder Brushes	28 | *1*		*541.301.09*			

Presentation „Cut Case" Carton

Cut Cases for presenting the products
Cut Cases are a simple alternative for presenting brushes in large quantities. The Products can be inserted in the self-service wall modularly.

Item Nos. in bold are available ex stock.
Consider our minimum order value for *italic printed* article numbers (see page 152).

STA	= steel wire, crimped
STH	= steel wire, high tensile, straight
ROF	= stainless steel wire
ROH	= stainless steel wire, high tensile, straight
MES	= brass wire
PA	= polyamide
PP	= polypropylene
SIC	= brass wire

EAN **Brushes in Cut Cases**

Description	Filling material			Pack.	Carton size	Art.-No.
File Cleaner	**STA** straight 0,30	250 x 40		10	1	**037.201.CC**
Hand Brush	**STA** straight 0,35	2 Rows		10	1	**100.021.CC**
Hand Brush	**STA** straight 0,35	3 Rows		10	1	**100.031.CC**
Hand Brush	**STA** straight 0,35	4 Rows		10	1	**100.041.CC**
Hand Brush	**STA** straight 0,35	5 Rows		8	1	**100.051.CC**
Hand Brush	**STA** straight 0,35	6 Rows		8	1	**100.061.CC**
Hand Brush	**ROF** crimped 0,35	3 Rows		10	1	**104.631.CC**
Hand Brush	**ROF** crimped 0,35	4 Rows		10	1	**104.641.CC**
Hand Brush	**MES** crimped 0,35	3 Rows		10	1	**107.631.CC**
Hand Brush	**MES** crimped 0,35	4 Rows		10	1	**107.641.CC**
Hand Brush	**STA** straight 0,35	4 Rows	with Scraper	8	1	**120.401.CC**
Rivet Brush	**STA** straight 0,35	3 Rows	V-shaped	8	1	**120.801.CC**
Rivet Brush	**ROF** straight 0,35	3 Rows	V-shaped	8	1	**120.811.CC**
Duster	**PP** straight 0,40	4 Rows		6	2	**124.801.CC**
Spark Plug Brush	**MES** crimped 0,15	3 Rows		25	1	**125.211.CC**
Fine Scratch Brush	**MES** crimped 0,15	4 Rows		15	1	**126.411.CC**
Fine Scratch Brush	**PA** straight 0,30	4 Rows		15	1	**126.451.CC**
Staining Brush	**MES** crimped 0,15	7 Rows		6	1	**144.001.CC**
Staining Brush	Leather/Fibre	3/7 Rows		4	1	**144.701.CC**
Professional Hand Brush	**STA** straight 0,35	2 Rows	2 Components Handle	10	1	**182.401.CC**
Professional Hand Brush	**ROF** straight 0,35	2 Rows	2 Components Handle	10	1	**182.421.CC**
Professional Hand Brush	**MES** crimped 0,25	2 Rows	2 Components Handle	10	1	**182.451.CC**
Hand Brush with Plastic Handle	**ROF** crimped 0,35	3 Rows		10	1	**185.431.CC**
Wheel Brush with Plastic Body	**SIC** K 80 / 1,2	7 Rows	Thread M 14	2	1	**402.880.CC**
Disc Brush with Plastic Body	**SIC** K 80 / 1,2	4 Rows	Thread M 14	2	1	**405.845.CC**
Cup Brush	**STA** crimped 0,35	DIA 65	Thread M 14	15	1	*421.167.CC*
Cup Brush	**ROH** crimped 0,30	DIA 65	Thread M 14	15	1	*421.367.CC*
Knot Cup Brush	**STH** straight 0,50	DIA 65	Thread M 14	12	1	*482.217.CC*
Knot Cup Brush	**STH** straight 0,50	DIA 90	Thread M 14	8	1	*485.237.CC*
Knot Conical Brush	**STH** straight 0,50	DIA 100	Thread M 14	5	1	*471.257.CC*
Knot Wheel Brush	**STH** straight 0,50	DIA 115	Bore 22,2	6	1	*472.211.CC*

Measurement in mm: Carton Size 1: 300x100x130 | Carton Size 2: 300x200x130

Sales Promotion Display

1 2 3

Low-cost product presentation – Brushes on card

1 Displaybox with Toolbrushes

Pack	Catalogue Page	Filling	D mm | *inch*	d mm | *inch*	RPM max.	Pack.	Art.-No.
Knot Cup Brushes	53	**STH** 0.50 | *0.020"*	65 | *2 1/2*	M 14 x 2.0	12,500	20	**482.217.07**
Knot Wheel Brushes	17	**STH** 0.50 | *0.020"*	115 | *4 1/2*	22.2 | *7/8*	12,500	18	**472.211.07**
Knot Bevel Brushes	59	**STH** 0.50 | *0.020"*	100 | *4*	M 14 x 2.0	12,500	12	**471.257.07**
Crimped Cup Brushes	56	**STA** 0.30 | *0.012"*	60 | *2 3/8*	M 14 x 2.0	12,500	20	**421.167.07**

2 D.I.Y. Brush Assortments; Shank Brushes

Description and technical data please see table above and on page 124, 125

Contents: 36 pieces assorted						Art.-No.
6 Wheel Brushes	410.132	6 Wheel Brushes	410.153	6 Cup Brushes	430.123	**499.907**
6 Cup Brushes	430.133	6 End Brushes	455.161	6 Cylinder Brushes	541.301	
9 Wheel Brushes	410.132	9 Cup Brushes	430.123			**499.921**
9 Wheel Brushes	410.153	9 Cup Brushes	430.133			

3 Brushes with Shank 6 mm Ø on Card

Description and technical data please see table above and on page 69, 124, 125

	D mm | *inch*	Pack.	STA 0.30 | *0.012"* 0.35 | *0.014"*	MES 0.25 | *0.010"* 0.30 | *0.012"*	SIC 80 Art.-No.	STH knotted 0.50 | *0.020"*
Wheel Brushes	50 | *2*	10	**410.123.07**			
	75 | *3*	10	**410.133.07**	**410.136.07**	**410.138.07**	**417.198.07**
	100 | *4*	10	**410.153.07**		**410.158.07**	
Cup Brushes	50 | *2*	10	**430.123.07**	**430.126.07**	**430.128.07**	
	75 | *3*	10	**430.133.07**		**430.138.07**	
End Brushes	25 | *1*	10	**455.161.07**			
Cylinder Brushes	28 | *1*	10	**541.301.07**			

The most demanded tool brushes are not only offered single or bulk packed. These fast sellers are presented even better in sale promoting display cartons. They can be put on tool shelves or on the counter.

The standard assortment contains:
- Knot cup brushes diameter 65
- Knot wheel brushes diameter 115
- Knot bevel brushes diameter 100
- Cup brushes with crimped wire diameter 60

A display carton with the best selling Do It Yourself Brushes, bulk packed, completes the offer.

Item Nos. in bold are available ex stock.
Consider our minimum order value for *italic printed* article numbers (see page 152).

STA = steel wire, crimped
STH = steel wire, high tensile, straight
MES = brass wire, crimped
SIC = silicon carbide bristles

Sales Promotion Tube Brushes

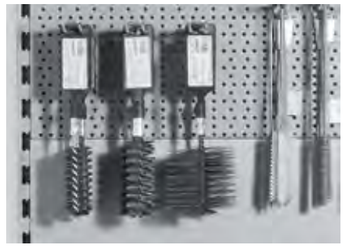

1 Hanger assembly for tube brushes, PP black, with euro hole

Interior Thread	Total length mm | *inch*	Width mm | *inch*	Height mm | *inch*	Pack.	Art.-No.
M 6	135 | *5*	42 | *1 5/8*	2 | *5/64*	10	**000.501**
M 10	135 | *5*	42 | *1 5/8*	2 | *5/64*	10	**000.503**
W 3/8"	135 | *5*	42 | *1 5/8*	2 | *5/64*	10	**000.506**
W 1/2"	135 | *5*	42 | *1 5/8*	2 | *5/64*	10	**000.507**

2 Brushes with thread, incl. hanger assembly

	Diameter Brush mm | *inch*	Total length Brush mm | *inch*	Total length Brush mm | *inch*	Thread Brush	Pack.	STA Art.-No.
Tube Brushes	20 | *3/4*	150 | *6*	100 | *4*	W 1/2"	10	*502.120.03*
	30 | *1 1/4*	160 | *6 1/4*	100 | *4*	W 1/2"	10	**506.130.03**
	35 | *1 1/2*	160 | *6 1/4*	100 | *4*	W 1/2"	10	*506.135.03*
	40 | *1 3/8*	160 | *6 1/4*	100 | *4*	W 1/2"	10	**506.140.03**
	50 | *2*	160 | *6 1/4*	100 | *4*	W 1/2"	10	**506.150.03**
	63 | *2 1/2*	160 | *6 1/4*	100 | *4*	W 1/2"	10	*506.163.03*
	75 | *3*	160 | *6 1/4*	100 | *4*	W 1/2"	10	**506.175.03**
	101 | *4*	160 | *6 1/4*	100 | *4*	W 1/2"	10	**506.101.03**
Boiler Brushes	40 x 80 | *1 3/8 / 3*	160 | *6 1/4*	100 | *4*	W 1/2"	10	**532.202.03**
	50 x 100 | *2 / 4*	160 | *6 1/4*	100 | *4*	W 1/2"	10	**532.203.03**

Presentation for tube brushes
With this practical hanger assembly from now on also tube brushes with thread can be presented on self-service walls in the retail market.
The hangers are available in M 6, M 10, W 3/8" and W 1/2". All hangers are with a eurohole.
A label can be fixed at the front of the hanger.

Sales Promotion

Professionalism, service, quality...
The LESSMANN Display units will make a good impression on your customers. They are not only good for your image but will also have a positive effect on promoting and increasing your brush sales. The comprehensive and at the same time clear presentation makes the customers choice much easier.

Take advantage of our experience and use this possibility that will lead to successful increased sales. Beside your special demands the most important thing to know is the branch where your most important customers come from and what their demands are. We have tried and tested variations of assortments for different kind of constellation. Please do not hesitate to contact us and we will arrange your individual programme. Because the production of high quality brushes is as important as having success with our products!

1 | Self-service Wall 100 x 220 cm
The most effective sales promotion for your LESSMANN brush assortment. Available with LESSMANN logo or Brush-Know-how label.

2 | Individual mix for Success
Products that fit in with the wishes of your (most important) customers and their main demand, arranged together with you and your customers. Your assortment can mainly consist of technical brushes or hand brushes.

3 | Carton Packing
All brushes for angle grinders in sales promoting single packing – stable and safe.

4 | Hand Brushes with EAN Code
All standard hand brushes (article no. 10x.xxx) with EAN code. Without extra charges for you!

5 | Display boxes for Shank Brushes
Available as a standard for all shank wheel brushes, cup brushes and end brushes with shank.

6 | Brush-Know-how Flyer
The most important brush applications of our brush assortment in length DIN with technical information and hints!

7 | Hanger Assembly for tube brushes
With this hanger with euro hole, brushes with thread can be presented.

8 | Cut Cases
Cut Cases for an easy solution of presenting products in large quantities.

We will help you with the right choice of shelf
On request we can arrange the right shelf solution for presenting your brushes!

Small self-service wall
A suitable alternative solution: A practical self-service wall with the measurements 67 x 180 cm.

Little helps for orientation (labels)
They give hints regarding brushes and their application. Available for following article groups: Hand brushes, brushes for drilling machines and brushes for angle grinders.

Brush-Know-how Poster
All important brush applications at first glance! Available as label 100 x 40 cm and as poster 40 x 60 cm. Ask us or our representatives!

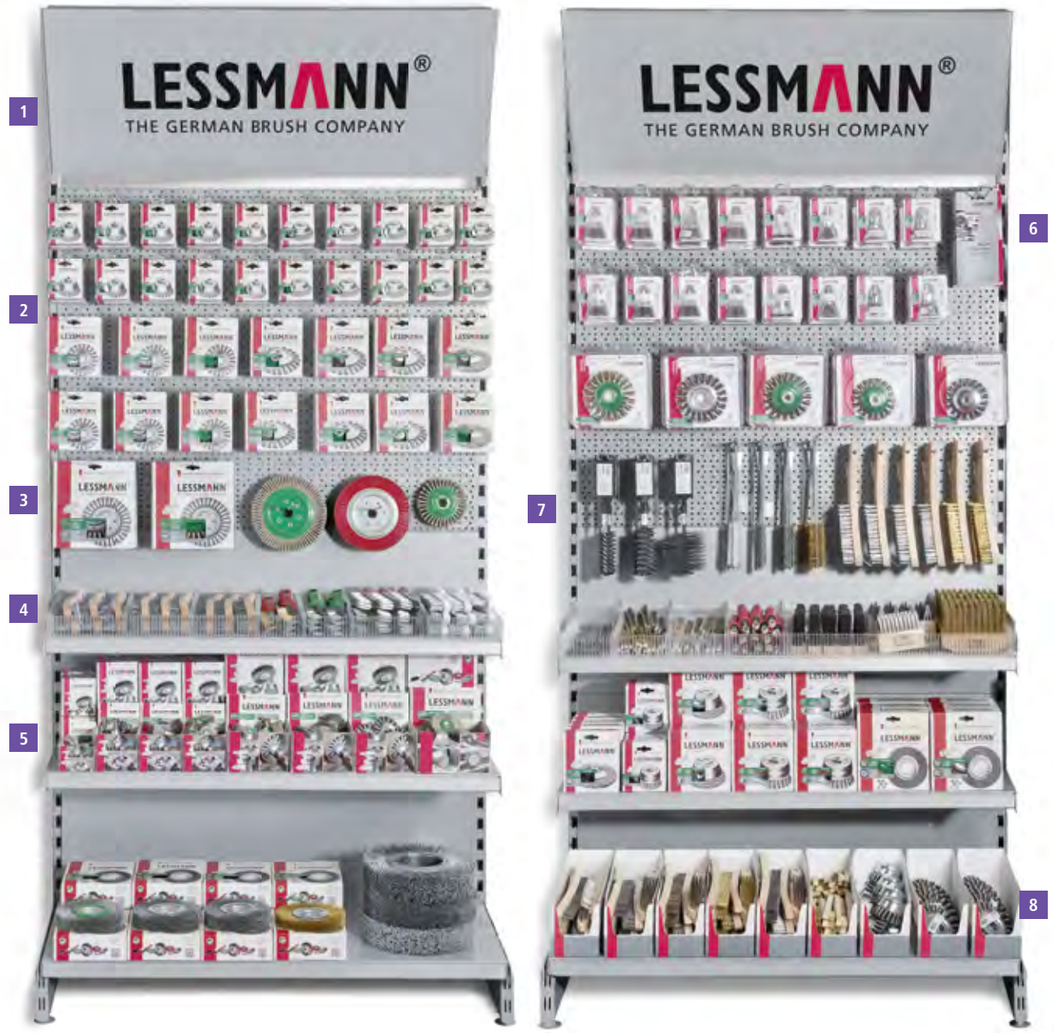

Private Label
A good idea with different solution possibilities. Ask for your own brand!

Sales promoting blister packing
For all drilling machines and angle grinders.

Take a look at quality
All technical data and safety information as well as observation windows for recognising the brushes (e.g. green marking for stainless steel brushes).

Stainless Steel Marking
LESSMANN brushes with stainless steel wire can easily be recognised by green cups or side plates.

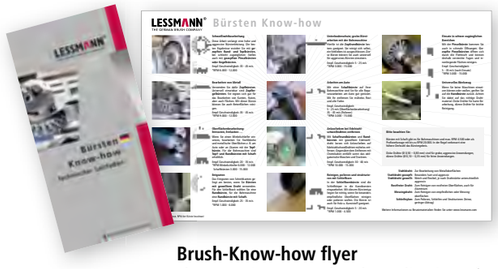

Brush-Know-how flyer
The most important brush application of our brush assortment in length DIN with technical information and hints!

Order now:
German version: Art.-No. **99BKHDEU**
English version: Art.-No. **99BKHENG**

Cut Cases
Cut Cases for an easy solution of presenting products in large quantities.

LESSMANN

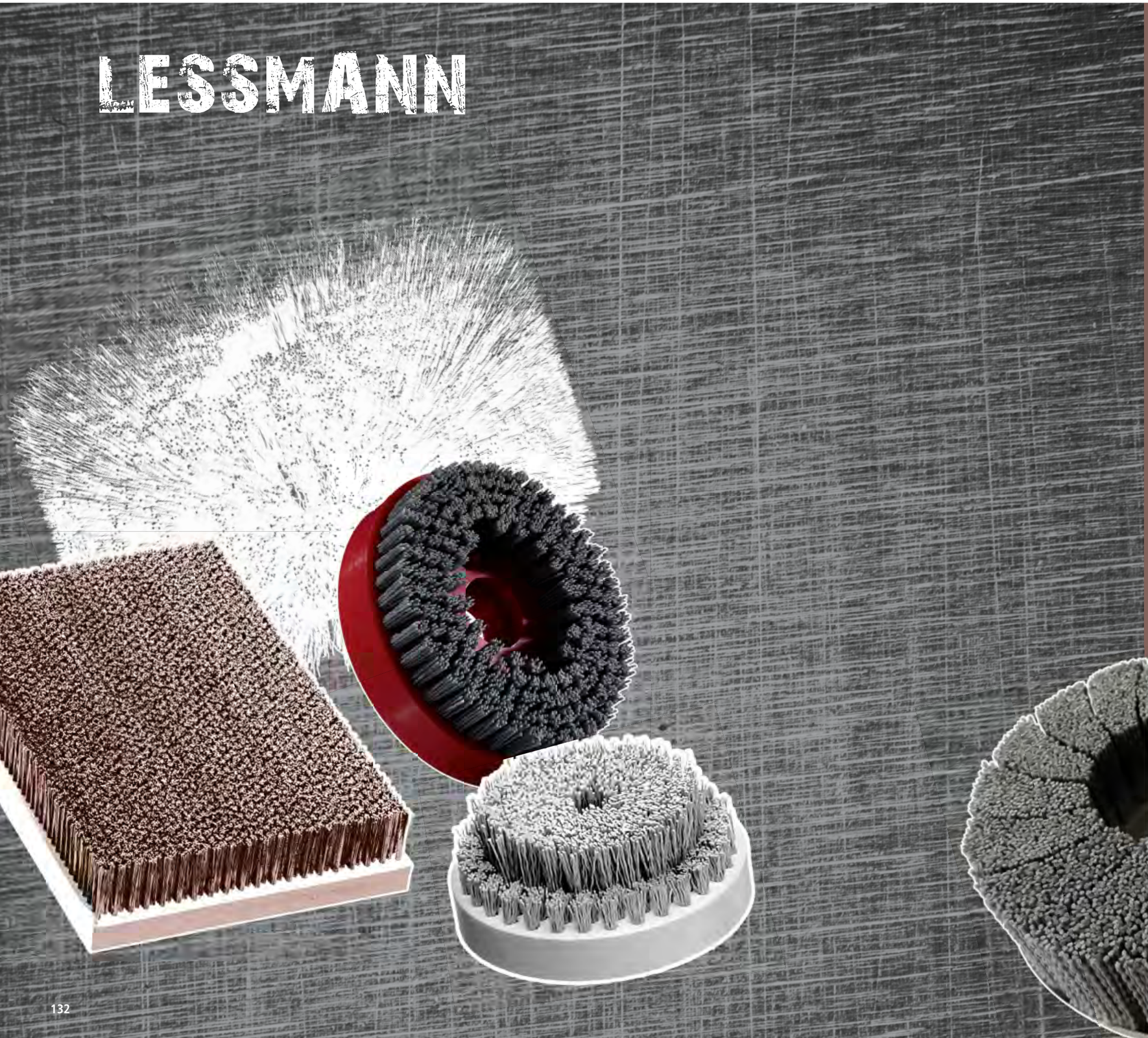

Brushes with carbon fibre

Brushes with carbon fibre for electro-chemical cleaning

To use in machines for cleaning weld seams

Due to oxidation on stainless steel surfaces temper colour is a result from heating. Hence often a post-treatment of the surface is necessary to reestablish the original character.
End brushes with carbon fibres are used in special machines for cleaning weld seams. The typical electrochemical jobs are the following:

Cleaning
To remove tepering colour and scales on stainless steel surfaces, e.g. on weld seams.

Polishing
For polishing stainless steel surfaces. Residues can be removed with end brushes.

Marking
With special patterns surfaces can be marked permanently by the electrochemical process.

Electroplating / Surfacing
Due to the use of the end brushes, different coatings can be put on the surfaces or they can be refined.

Cleaning of areas which are hard to reach

Before the treatment | After the treatment
Cleaning of weld seams

End brushes for standard machines
For many customary available machines for weld seam treatment LESSMANN offers the suitable end brushes.
Depending on the customers' demands the end brushes are available with different adapters, e.g. interior / exterior threads.

Time-saving and effective
Unlike other processes, working with special machines for weld seam cleaning are environmentally friendly and by using it correctly no toxic vapours are generated.
Due to the high flexibility of the filament also areas which are hard to reach can be treated easily.
By using LESSMANN brushes within a short time a clean result is achieved. Weld seams are treated without any residues and surfaces are treated without being damaged.

Brushes with carbon fibre

	Sleeve	D	GL	BL	Shape of thread	d	Presentation	Pack.	Art.-No.
1	Copper	10	65	30	outside	M6		10	**047.700**
2	Copper	12	90	40	inside	M10 x 0,75	Plastic coating	10	**047.705**
	Copper	12	90	40	inside	M10 x 1,0	Plastic coating + side thread M4	10	**047.707**
	Copper	10	80	30	inside	M8 x 1,0	Plastic coating	10	**047.708**
3	Stainless Steel	8	50	30	outside	M6 x 1,0	Teflon sleeve (DRM 12 mm)	10	**047.750**
	Stainless Steel	8	50	30	outside	M6 x 1,0		10	**047.755**
4	Stainless Steel	8	72	42	outside	M6 x 0,75	Plastic coating	10	**047.754**
5	Stainless Steel	12	75	40	inside	M10		10	**047.757**
6	Stainless Steel	12	75	40	inside	M10		10	**047.801**

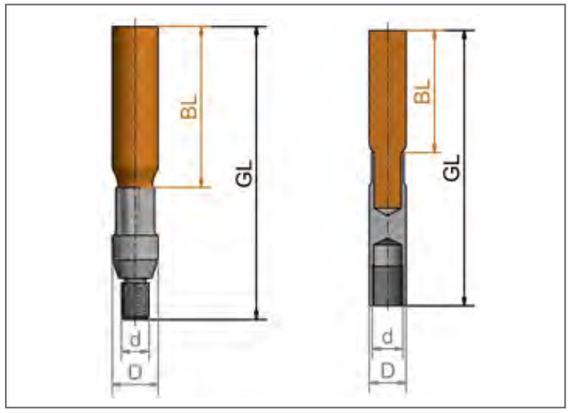

Item Nos. in bold are available ex stock.
Consider our minimum order value for *italic printed* article numbers (see page 152).

High Performance Filament Brush

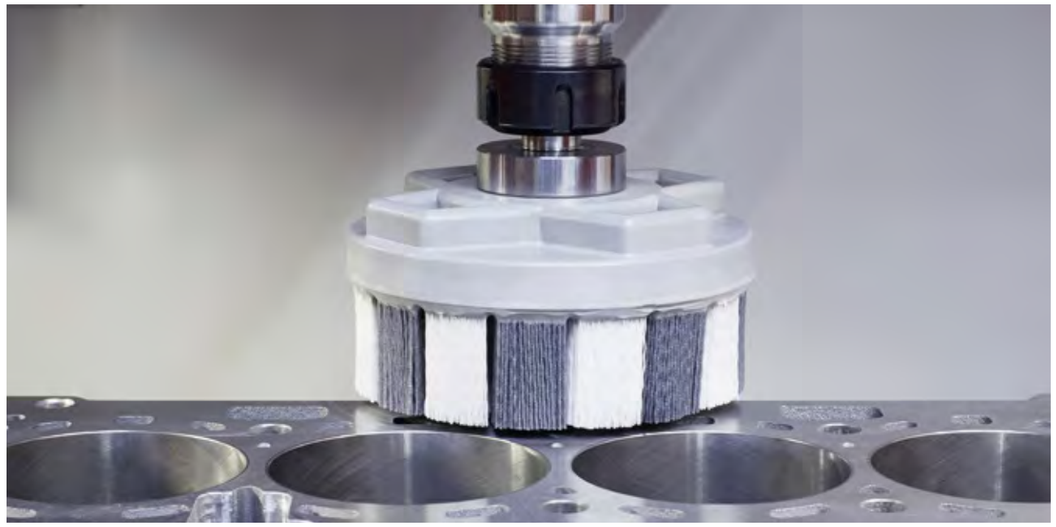

HFB Disc Brushes
LESSMANN high performance surface finishing tools achieve excellent deburrings and edge radiusing on exterior and interior areas of work pieces. Next to the applications in machining centers, especially in linear deburring and finishing lines with planetary brush systems HFB brushes obtain high efficiency.

They are used for e.g. for the deburring of
- blanked parts
- sintered parts
- hydraulic and pneumatic work pieces
- aluminium work pieces
- and many more

Also work pieces which are exposed to high pressures demand precise egde radiuses. LESSMANN HFB brushes are ideal tools which achieve these requirements outstandingly.

In a special production process LESSMANN HFB brushes are manufactured with a very high filling density. Available are high abrasvie nylons with silicon carbide, ceramic or diamond grit.
Due to the application orientated selection of the filling materials an excellent deburring and constant edge radiusing in a short working time is achieved. Depending on the application HFB brushes can be used under dry or wet conditions.

Typically in LESSMANN HFB Brushes high quality filling material is used. It is very bending resistant and low-abrasion, besides it is very appropriate for working under wet conditions.

Depending on the requirements the brushes can be produced with individual filling fields. Full filament but also a fragmentation in predefined fields or a deviation of the bristles is possible.
On the customer's demand LESSMANN produces brushes for all machine brands. Our basic executions suitable for all common machines are deliverable within short-term.
Please contact us for further information!

Typical work pieces which are treated with LESSMANN HFB brushes.

1

2

3

4

1 HFB Disc Brushes, Dense Filament

Body Ø DA	Body Thikness KD	Trim Length H	Bore d	open space D2	open space D1	RPM max.	suitable for	Pack.	SIC K 60 Art.-No.	SIC K 80 Art.-No.	SIC K 120 Art.-No.	SIC K 180 Art.-No.	SIC K 320 Art.-No.
50	15	25	6-kant	21	45	3,600	adapter 600.000.83	1	*601.131.10**	*601.231.10**	*601.331.10**	*601.431.10**	*601.531.10**
75	15	25	4-kant	30	70	3,600	adapter 600.000.84	1	*602.141.10**	*602.241.10**	*602.341.10**	*602.441.10**	*602.541.10**
100	15	35**	4-kant	43	85	3,600	adapter 600.000.84	1	*603.141.10**	*603.241.10**	*603.341.10**	*603.441.10**	*603.541.10**
125	15	35**	4-kant	58	120	3,000	adapter 600.000.84	1	*604.141.10**	*604.241.10**	*604.341.10**	*604.441.10**	*604.541.10**
125	15	40**	18	58	120	3,000		1	*604.181.10**	*604.281.10**	*604.381.10**	*604.481.10**	*604.581.10**
150	28	40**	18	58	145	2,500		1	*605.181.10**	*605.281.10**	*605.381.10**	*605.481.10**	*605.581.10**
150	28	25	25/35/+MB	58	145	2,500		1	*605.151.10**	*605.251.10**	*605.351.10**	*605.451.10**	*605.551.10**

MB = drive bore

4 HFB Adapters

Shaft diameter	Total Length **GL**	Thread	Bore	Art.-No.
12h6	103	M16x1,5	Hexagonal	*600.000.83**
12h6	103	M16x1,5	Square	*600.000.84**

* Price on request.

4 | LESSMANN Adapters
(Square and Hexagonal).
Delivery includes 1 aluminium plate,
1 disc, 2 hex nuts.
On demand.

On request we produce the brushes referred to your hole pattern. For this purpose please send us a drawing with measurements.

3 | **For the treatment of ductile or strong materials and when using high peripheral speeds a stabilization sleeve can be mounted. It causes a better stabilization and prevents a disperse of the filling material.

2 | On request different versions, e.g. turbo trim

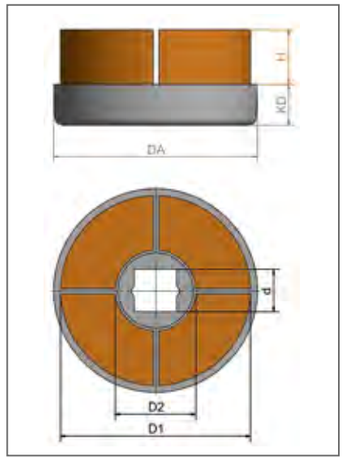

Item Nos. in bold are available ex stock.
Consider our minimum order value for *italic printed* article numbers (see page 152).

SIC = silicon carbide bristles

Staple Set Brushes

Staple Set Brushes
For applications with little mechanic load, brushes in a staple set edition are produced.
Typical applications for staple set Wheel Brushes and Wide Face Brushes, Disc Brushes or Lath Brushes are for example cleaning, deburring, surface finishing, structurizing, smoothing, transporting, sorting or moistening.
Depending on the requirements, the filling material can be fixed individually into the body. The distance of the bundles are variable and comply with the application.
As filling material next to different wires also fibres are available. Also mixed filament in various mixing proportions are possible.
Disc Brushes usually are delivered with thread or bore.
Staple set wheel and roller brushes are produced with bore or arbour absorption, depending on the customers' specification.

Please inform yourself on the following pages and do not hesitate to contact us for personal advice!

Possible desities of brush filling material
for Wheel Brushes and Wide Face Brushes, Disc Brushes and Lath Brushes

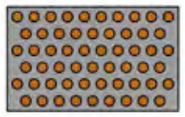
thin filling material

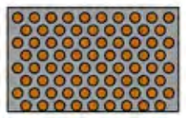
mean desity of filling material

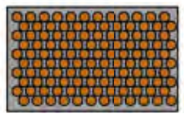
dense filling material

Possible placement of brush filling material
for Wheel Brushes and Wide Face Brushes, Disc Brushes and Lath Brushes

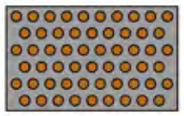
staggered filling material

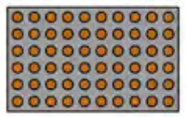
straight filling material

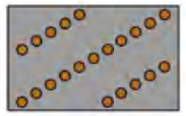
spiral filling material

Disc Brushes

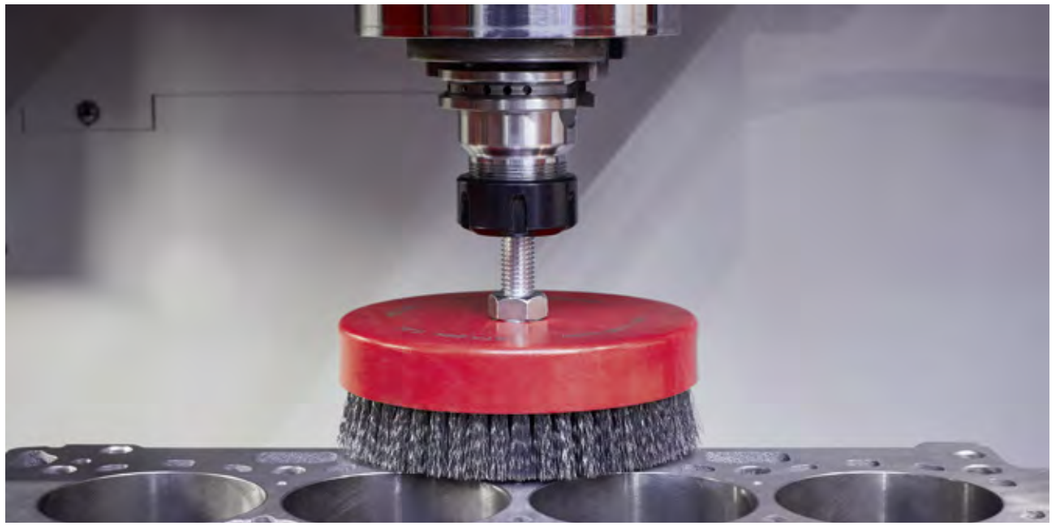

Disc Brushes – Measurements

DA	KD	H		d1/d2			
External diameter	Body height	Trim height	Deviation	Thread	Body	Trim	Trim
mm	mm	mm	of the Bristles		Material	Material	Density
10 - 800	10 - 100	8 - 95 steel 8 - 135 Plastic	max. 45°	freely selectable	PP, PE, PA, Wood, Plywood	STA, STM, MES, ROF, PP, PE, PA, FIB, ROS, SIC, AO	thin, mean, dense

Disc Brushes – for cleaning and deburring
Disc Brushes are used for the treatment of plane surfaces on almost every material. The numerous variations of body and trimming materials and adapter systems make them for all purposes applicable.
For deburring working pieces, disc brushes can be inserted in individual equipments as well as in machining centres for removing secondary burrs.

Disc Brushes for the wood machining industry
Disc brushes used for the wood machining industry have a very long filling material (SIC). Used on angle grinders, the disc brushes are ideal for maintaining, cleaning, structuring or polishing wood.
The brushes are very effective when working on large surfaces.

Circular Discs – Standard Body
If your application allows the mentioned sizes, we recommend our standard bodies.

The inquiry form for disc brushes you find on page 141 or at www.lessmann.com

Item Nos. in bold are available ex stock.
Consider our minimum order value for *italic printed* article numbers (see page 152).

STA	=	steel wire
STM	=	brass coated steel
ROF	=	stainless steel wire
MES	=	brass wire
PP	=	polypropylene
PA	=	polyamide
PE	=	polyethylene
FIB	=	fibre
ROS	=	horse hair
SIC	=	silicon carbide bristles
AO	=	aluminium oxide bristles

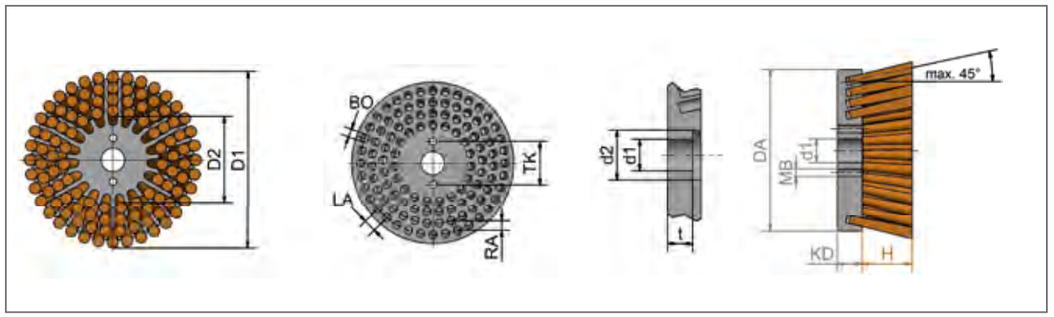

Disc Brushes

Disc Brushes

	Filling	DA mm | *inch*	KD mm | *inch*	H mm | *inch*	d1 mm | *inch*	RPM max.	Art.-No.
	STA 0.20 | *0.008"*	150 | *6*	25 | *1*	25 | *1*	M 14	2,000	**405.006**
	SIC 180/1.0	125 | *5*	25 | *1*	25 | *1*	22.2 | *7/8*	3,000	*405.854*
	SIC 180/1.0	150 | *6*	25 | *1*	20 | *3/4*	25 | *1*	2,000	*405.835*
	SIC 120/1.1	150 | *6*	25 | *1*	25 | *1*	25 | *1*	2,000	*405.864*
1	**Mixed filament STA** 0.30 / **PA** 0.35	130 | *5 1/8*	25 | *1*	40 | *1 3/8*	M 14	2,500	*405.908*
1	**Mixed filament STA** 0.30 / **PA** 0.35	200 | *8*	25 | *1*	40 | *1 3/8*	M 14	1,500	*405.905*

2 Disc Brushes for the wood machining

Filling	DA mm | *inch*	KD mm | *inch*	H mm | *inch*	d1	RPM max.	Pack.	Art.-No.
SIC 46/1.6	130 | *5 1/8*	20 | *3/4*	50 | *2*	M 14	2,500	1	*405.843*
SIC 60/1.5	130 | *5 1/8*	20 | *3/4*	50 | *2*	M 14	2,500	1	*405.844*
SIC 80/1.2	130 | *5 1/8*	20 | *3/4*	50 | *2*	M 14	2,500	1	**405.845**

Circular Discs – Standard Body – Measurements (in Stock) Body Material PP (red)

DA mm | *inch*	KD mm | *inch*	d1
130 | *5 1/8*	20 | *3/4*	Bore 22,5 / 19
150 | *6*	25 | *1*	Bore 12
150 | *6*	25 | *1*	Bore 35 / 25, mounting hole 2 x ø11, TK 56
180 | *7*	18 | *5/8*	Thread M12
180 | *7*	18 | *5/8*	Thread M12 left
200 | *8*	25 | *1*	Bore 12
200 | *8*	25 | *1*	Bore 35 / 25, mounting hole 2 x ø11, TK 56
220 | *8 5/8*	20 | *3/4*	Bore 40

The standard bodies can be adapted on demand (dress to size, drill) for receiving other measurements.

Item Nos. in bold are available ex stock.
Consider our minimum order value for *italic printed* article numbers (see page 152).

STA = steel wire
PA = polyamide
SIC = silicon carbide bristles

Enquiry for Circular Discs

Drawing / description of application

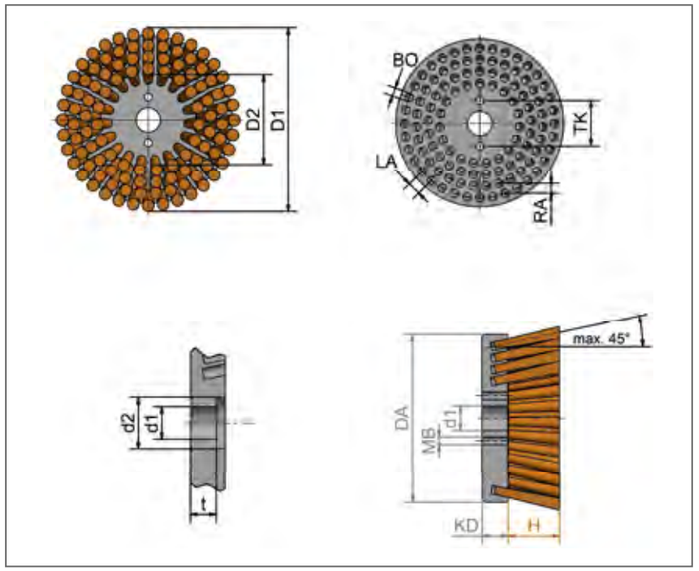

sender: company, contact person

Inquiries and Infos:
Phone: +49 9082 707-0 info@lessmann.com
Fax: +49 9082 707-76 www.lessmann.com

Piece number:_____

Brush Application ☐ dry ☐ wet
- ☐ deburring
- ☐ cleaning
- ☐ roughening / structuring
- ☐ transporting
- ☐ others

Material; _____°C Temperature
- ☐ steel
- ☐ aluminium
- ☐ wood
- ☐ stainless steel
- ☐ plastic
- ☐ others

Filling material
- ☐ steel
- ☐ brass coated steel
- ☐ brass
- ☐ stainless steel
- ☐ PP
- ☐ PA
- ☐ PE
- ☐ abrasive filament (SIC)
- ☐ abrasive filament (AO)
- ☐ fibre
- ☐ horsehair

Diameter of filling material _____

Filling density

☐ thin ☐ mean ☐ dense

Filling placement

☐ **full-body** ☐ **fields** ☐ **turbo**

Please mention measurements according to drawing

DA external diameter_____ mm
D1 dia trim outside _____ mm
D2 dia trim inside _____ mm
KD body height _____ mm
d1 bore _____ mm
d2 dia counterbore _____ mm
TK pitch circle drive bore_____ mm
MB dia drive bore_____ mm
H trim height_____ mm
RA row distance _____ mm
LA hole distance _____ mm
BO bundle bore _____ mm
Deviation of the Bristles _____ °

Body
- ☐ PP
- ☐ PE
- ☐ PA
- ☐ wood

Lath Brushes

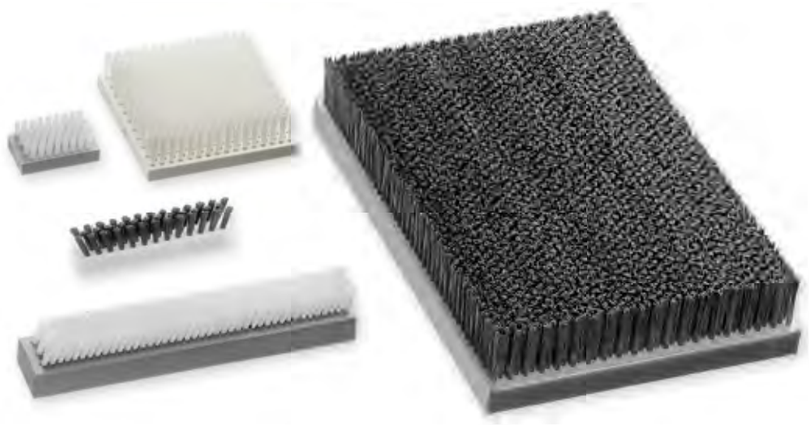

Lath Brushes – Measurements

KB	KL	KD	H	Deviation	Body	Filling	Filling
mm	mm	mm	mm	of the Bristles	Material	Material	Density
8 - 750	8 - 2400	10 - 100	8 - 95 Steel 8 - 135 Plastic	max. 35°	PP, PE, PA, Wood, Stack wood	STA, STM, MES, ROF, PP, PE, PA, FIB, ROS, SIC, AO	thin, mean, dense

Lath Brushes
Lath Brushes work in machines and are used for clearing, cleaning, insulating and discharging electric charges etc. Various body materials are possible: including wood and plastic.
The filling material can be manifold and goes from fine horsehair to firm steel wire. Through the deviation of the bristles until 35° the lath bushes are very flexible in their applications.

As required the stocked standard bodies could be reworked (turned, drilled out) to get further dimensions

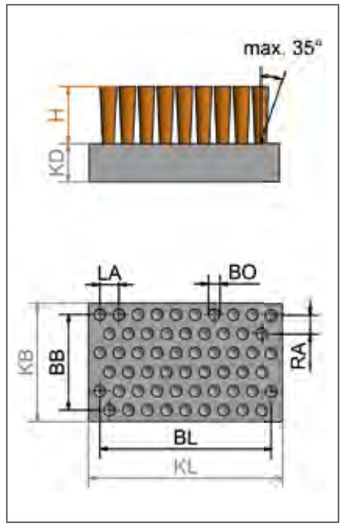

Item Nos. in bold are available ex stock.
Consider our minimum order value for *italic printed* article numbers (see page 152).

STA	= steel wire
STM	= brass coated steel
ROF	= stainless steel wire
MES	= brass wire
PP	= polypropylene
PA	= polyamide
PE	= polyethylene
FIB	= fibre
ROS	= horse hair
SIC	= silicon carbide bristles
AO	= aluminium oxide bristles

Enquiry for Lath Brushes

Drawing / description of application

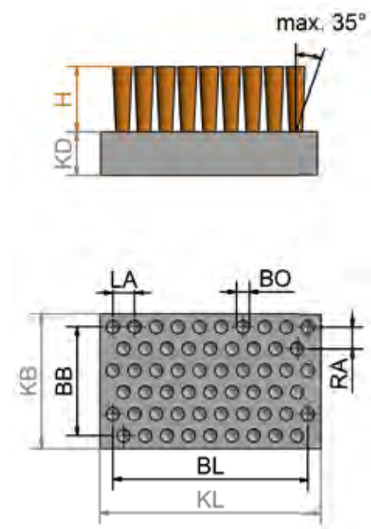

sender: company, contact person

Inquiries and Infos:
Phone: +49 9082 707-0 info@lessmann.com
Fax: +49 9082 707-76 www.lessmann.com

Piece number:_____

Brush Application ☐ dry ☐ wet
- ☐ deburring
- ☐ cleaning
- ☐ roughening / structuring
- ☐ transporting
- ☐ others

Material; _____°C Temperature
- ☐ steel
- ☐ aluminium
- ☐ wood
- ☐ stainless steel
- ☐ plastic
- ☐ others

Filling material
- ☐ steel
- ☐ brass coated steel
- ☐ brass
- ☐ stainless steel
- ☐ PP
- ☐ PA
- ☐ PE
- ☐ abrasive filament (SIC)
- ☐ abrasive filament (AO)
- ☐ fibre
- ☐ horsehair

Diameter of filling material _____

Filling density

☐ thin ☐ mean ☐ dense

Filling placement

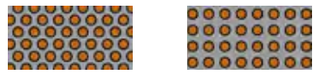

☐ **staggered** ☐ **straight**

Please mention measurements according to drawing

KL	total length	_____	mm
KB	total width	_____	mm
KD	body height	_____	mm
BL	trim length	_____	mm
BB	trim width	_____	mm
H	trim height	_____	mm
RA	row distance	_____	mm
LA	hole distance	_____	mm
BO	bundle bore	_____	mm
Deviation of the Bristles		_____	°

Body
- ☐ PP
- ☐ PE
- ☐ PA
- ☐ wood

Wheel Brushes and Wide Face Brushes

Staple Set Wheel and Roller Brushes – Measurements

D	KD	KL	A	d	Body	Filling	Filling
mm	mm	mm	mm	mm	Material	Material	Density
45 - 440 steel 45 - 500 plastic	25 - 250	5 - 800	3 - 780	freely selectable	PP, PE, PA, Wood	STA, STM, MES, ROF, PP, PE, PA, FIB, ROS, SIC, AO	thin, mean, dense

Standard body diameter (on stock) in body material PP

50, 80, 100, 140

Staple Set Wheel and Roller Brushes
These brushes are used for cleaning, deburring, surface finishing, structurizing, smoothing and transporting.
The brush body is of wood or plastic. The filling material is determined by the brushes purpose. Please also consider temperature, chemical and mechanical characteristics during use. Filling lenght, filling material, filling diameter and filling density are significant for the mode of action of the brush.
The density of the filling material can be varied by the diameter and the distance of and from the hole.
The staple set wheel and roller brushes are available with bore or arbor absorption, depending on the customers' specification.
The mentioned data in the chart should support you defining the right brush for your application.
For further information or support do not hesitate to contact us by e-mail, phone or fax. We will be very pleased to support you.

Note:
For applications which have a high mechanical load on the brushes we advise our wheel and roller brushes with crimped or knotted wire (page 49).

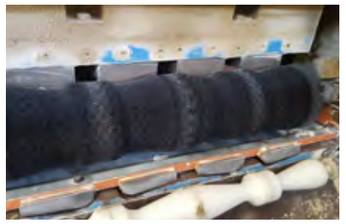

As required the stocked standard bodies could be reworked (turned, drilled out) to et further dimensions

Item Nos. in bold are available ex stock.
Consider our minimum order value for *italic printed* article numbers (see page 152).

STA	= steel wire
STM	= brass coated steel
ROF	= stainless steel wire
MES	= brass wire
PP	= polypropylene
PA	= polyamide
PE	= polyethylene
FIB	= fibre
ROS	= horse hair
SIC	= silicon carbide bristles
AO	= aluminium oxide bristles

Enquiry for Wheel Brushes / Wide Face Brushes

Drawing / description of application

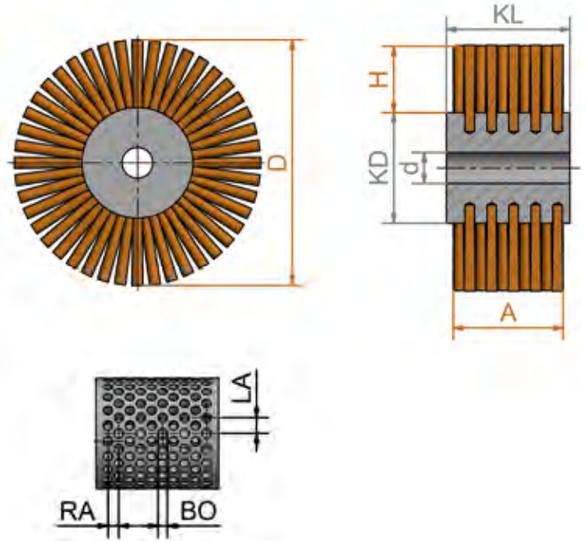

sender: company, contact person

Inquiries and Infos:
Phone: +49 9082 707-0 info@lessmann.com
Fax: +49 9082 707-76 www.lessmann.com

Piece number:_____

Brush Application ☐ dry ☐ wet
- ☐ deburring
- ☐ cleaning
- ☐ roughening / structuring
- ☐ transporting
- ☐ others

Material _____°C Temperature
- ☐ steel
- ☐ aluminium
- ☐ wood
- ☐ stainless steel
- ☐ plastic
- ☐ others

Filling material
- ☐ steel
- ☐ brass coated steel
- ☐ brass
- ☐ stainless steel
- ☐ PP
- ☐ PA
- ☐ PE
- ☐ abrasive filament (SIC)
- ☐ abrasive filament (AO)
- ☐ fibre
- ☐ horsehair

Diameter of filling material _____

Filling density

☐ thin ☐ mean ☐ dense

Filling placement

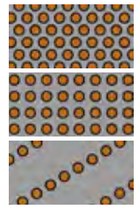

☐ **staggered**

☐ **straight**

☐ **spiral**

Please mention measurements according to drawing

D	Total Diameter	_____	mm
KD	Body Diameter	_____	mm
KL	Total Width	_____	mm
A	Working lenght	_____	mm
d	Bore	_____	mm
RA	row distance	_____	mm
LA	hole distance	_____	mm
BO	bundle bore	_____	mm

Body
- ☐ PP
- ☐ PE
- ☐ PA
- ☐ wood

Strip Brushes

Strip Brushes
Strip brushes are mainly used as cover in association with moving parts. They insulate doors and windows or help to keep moving parts on machines clean. There are many forms and profiles, with or without holders. Therefore, please indicate full measurements and holder details when ordering.
The profile can be made of steel, aluminium or plastic. The filling material can be bristles or steel wire.

Brushes for deburring machines
Special Strip Brushes as component part of deburring machines.

The inquiry form for strip brushes you find at www.lessmann.com

Required measurements and data:
GH total height
H filling length
RB back width
shape of fixing

Filling Material:
STA, STM, MES, ROF, PP, PE, PA, FIB, ROS

Strip Brushes with H profile, aluminium

mounting	GH	FH	H	FB	RB	Total length	PA 0.30 | *0.012"*	STA	ROF	Horsehair
	mm | *inch*		mm | *inch*			mm | *inch*	Art.-No.	Art.-No.	Art.-No.	Art.-No.
H-Profile	50 | *2*	25	25 | *1*	8	5	1,000 | *40*	**052.881**	**051.360**	**051.558**	*051.021*
H-Profile	90 | *3 1/2*	40	50 | *2*	12	8	1,000 | *40*	**052.891**	**051.348**	**051.547**	available on demand
H-Profile	65 | *2 1/2*	40	25 | *1*	12	8	1,000 | *40*		*051.324*		

Strip Brushes for deburring machines

mounting	GH	H	Total length	PA 0.35 | *0.014"*
	mm | *inch*	mm | *inch*	mm | *inch*	Art.-No.
Steel plate zinc coated	40 | *1 3/8*	35 | *1 1/2*	500 | *20*	*052.860*
Steel plate zinc coated	40 | *1 3/8*	35 | *1 1/2*	600 | *23 5/8*	*052.868*

Other dimensions on inquiry.
You find an inquiry form for strip brushes on www.lessmann.com

Item Nos. in bold are available ex stock.
Consider our minimum order value for *italic printed* article numbers (see page 152).

STA = steel wire
STM = brass coated steel
ROF = stainless steel wire
MES = brass wire
PP = polypropylene
PA = polyamide
PE = polyethylene
FIB = fibre
ROS = horse hair

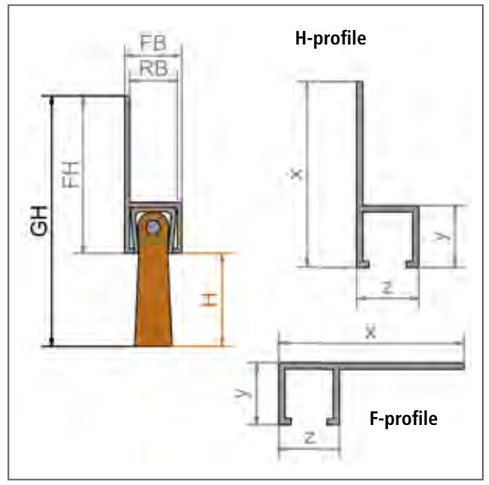

Article Numbers

Art. No. Page

000041 ... 41
000042 ... 41
000043 ... 41
000044 ... 41
000045 ... 41
000071 ... 119
000072 ... 119
000311 ... 93
000321 ... 93
000323 ... 93
000331 ... 93
000501 ... 129
000503 ... 129
000506 ... 129
000507 ... 129
000631 ... 41
000641 ... 41
000651 ... 41
000661 ... 41
000671 ... 41
00088663 ... 41
00088664 ... 41
00088665 ... 41
00088668 ... 41
00088832 ... 41
001211 ... 41,119
001212 ... 41,119
001215 ... 41,119
001222 ... 41,119
001225 ... 41,119
037101 ... 93
037200 ... 93
037201 ... 93
037201CC ... 127
037221 ... 93
037710 ... 93
045301 ... 121
045910 ... 121
045915 ... 121
047700 ... 135
047705 ... 135
047707 ... 135
047708 ... 135
047750 ... 135
047754 ... 135
047755 ... 135
047757 ... 135
047801 ... 135
048081 ... 51
048241 ... 51
048271 ... 51
048291 ... 51
048441 ... 51
048471 ... 51
048491 ... 51
048701 ... 51
048821 ... 51
048841 ... 51
048851 ... 51
048901 ... 51
048941 ... 51
048998 ... 51
048999 ... 51
051021 ... 147
051324 ... 147
051348 ... 147
051360 ... 147
051547 ... 147
051558 ... 147
052860 ... 147
052868 ... 147
052881 ... 147
052891 ... 147
056001 ... 87
056301 ... 87
056501 ... 87
056701 ... 87
061101 ... 93
064050 ... 93
100011 ... 85
100020 ... 85
100021 ... 85
100021CC ... 127
100030 ... 85
100031 ... 85
100031CC ... 127
100040 ... 85
100041 ... 85
100041CC ... 127
100050 ... 85
100051 ... 85
100051CC ... 127
100061 ... 85
100061CC ... 127
102431 ... 85
102441 ... 85
102611 ... 85
102621 ... 85
102631 ... 85
102641 ... 85
102651 ... 85
102661 ... 85
103711 ... 85
103721 ... 85
103731 ... 85
103741 ... 85
103751 ... 85
103761 ... 85
104321 ... 85
104331 ... 85
104341 ... 85
104351 ... 85
104421 ... 85
104431 ... 85
104441 ... 85
104451 ... 85
104611 ... 85
104621 ... 85
104630 ... 85
104631 ... 85
104631CC ... 127
104640 ... 85
104641 ... 85
104641CC ... 127
104651 ... 85
104661 ... 85
105420 ... 85
105421 ... 85
105431 ... 85
105440 ... 85
105441 ... 85
105451 ... 85
105461 ... 85
105721 ... 85
105731 ... 85
105741 ... 85
106621 ... 85
106631 ... 85
106641 ... 85
106651 ... 85
107321 ... 85
107331 ... 85
107341 ... 85
107351 ... 85
107411 ... 85
107421 ... 85
107431 ... 85
107441 ... 85
107451 ... 85
107461 ... 85
107611 ... 85
107621 ... 85
107631 ... 85
107631CC ... 127
107641 ... 85
107641CC ... 127
107651 ... 85
107661 ... 85
108041 ... 64
108331 ... 85,64
108341 ... 85,64
108351 ... 85,64
109431 ... 85
109441 ... 85
109451 ... 85
109741 ... 85
120401 ... 87
120401CC ... 127
120412 ... 87
120601 ... 87
120801 ... 87
120801CC ... 127
120811 ... 87
120811CC ... 127
120831 ... 87
121111 ... 92
121211 ... 92
122401 ... 87
122771 ... 64
122801 ... 87
122821 ... 87,64
122871 ... 64
124101 ... 97
124121 ... 97
124181 ... 64
124201 ... 97
124301 ... 97
124401 ... 97
124801 ... 97
124801CC ... 127
125111 ... 88
125201 ... 88
125211 ... 88
125211CC ... 127
125221 ... 88
125231 ... 88
125234 ... 88
125241 ... 88
125251 ... 88
125311 ... 88
125511 ... 88
125521 ... 88
126311 ... 89
126401 ... 89
126411 ... 89
126411CC ... 127
126431 ... 89
126441 ... 89
126451 ... 89
126451CC ... 127
126472 ... 89
126481 ... 89
126511 ... 89
126611 ... 89
126811 ... 89
132701 ... 89
132801 ... 88,64
136101 ... 87
136102 ... 87
136103 ... 87
137701 ... 89
138704 ... 89
138705 ... 89
140201 ... 91
140641 ... 91
140811 ... 91
140901 ... 91
141231 ... 91
141421 ... 91
142101 ... 93
142211 ... 93
144001 ... 92
144001CC ... 127
144011 ... 92,65
144021 ... 92
144111 ... 92,65
144121 ... 92
144211 ... 92
144311 ... 92,65
144411 ... 92,65
144701 ... 92
144701CC ... 127
144801 ... 92
146101 ... 95
146201 ... 95
146270 ... 64
146301 ... 95
147101 ... 95
147200 ... 95
147201 ... 95
147261 ... 95
147301 ... 95
147401 ... 95
148101 ... 95
148141 ... 95
148161 ... 95
148170 ... 64
148201 ... 95
148601 ... 95
151108 ... 99
151109 ... 99
151511 ... 99
15199107 ... 99
15199507 ... 99
152510 ... 99
152811 ... 91,65
15299507 ... 99
182001 ... 88
182152 ... 89
182162 ... 89
182172 ... 89
182331 ... 88
182401 ... 86
182401CC ... 127
182411 ... 86
182421 ... 86
182421CC ... 127
182431 ... 86
182451 ... 86
182451CC ... 127
182807 ... 89
182811 ... 89
183704 ... 89
183706 ... 89
184101 ... 121
184104 ... 121
184412 ... 121
185121 ... 86
185131 ... 86
185141 ... 86
185151 ... 86
185421 ... 86
185431 ... 86
185431CC ... 127
185441 ... 86
185451 ... 86
185621 ... 86
185631 ... 86
185641 ... 86
185651 ... 86
185811 ... 87
186431 ... 86
300091 ... 37
300102 ... 125
300742 ... 37
300771KG ... 23
30121310 ... 37
30121315 ... 37
30121320 ... 37
30121330 ... 37
30121415 ... 37
30121420 ... 37
30121430 ... 37
30122515 ... 37
30122520 ... 37
30122525 ... 37
30122530 ... 37
30123620 ... 37
30123630 ... 37
30436114 ... 61
30476114 ... 61
310141 ... 28
310161 ... 28
310341 ... 29
310361 ... 29
31070206 ... 37
310831 ... 27
310841 ... 27
310851 ... 27
310871 ... 27
31174201 ... 37
311762 ... 37
312141 ... 37
312142 ... 31
312143 ... 31
312162 ... 31
312163 ... 31
312342 ... 32
312362 ... 32
312363 ... 32
312542 ... 33
312543 ... 33
312562 ... 33
312563 ... 33
32000K17 ... 37
320001 ... 37
320003 ... 37
320004 ... 37
320009 ... 37
320061 ... 39
320102 ... 125
320141 ... 28
320161 ... 28
32016112 ... 37
32016K17 ... 37
320341 ... 29
32034119 ... 35
320361 ... 29
32070319 ... 35
320707 ... 28
320821 ... 27
32082119 ... 35
320831 ... 27
320841 ... 27
320851 ... 27
320871 ... 27
323002 ... 37
323003 ... 37
323132 ... 31
323133 ... 31
323142 ... 31
323143 ... 31
323162 ... 31
323163 ... 31
32330519 ... 35
323342 ... 32
323343 ... 32
32334819 ... 35
323362 ... 32
323363 ... 32
323542 ... 33
323543 ... 33
323562 ... 33
323563 ... 33
32370419 ... 35
32370519 ... 35
32377013 ... 35
32380519 ... 35
32382013 ... 35
32382819 ... 35
32383013 ... 35
32390010 ... 35
330001 ... 37
330141 ... 28
330161 ... 28
330341 ... 29
330361 ... 29
330821 ... 27
330841 ... 27
330851 ... 27
330871 ... 27
331161 ... 28
331341 ... 27
331361 ... 29
334132 ... 31
334142 ... 31
334143 ... 31
334162 ... 31
334163 ... 31
334342 ... 32
334343 ... 32
334362 ... 32
334363 ... 32
334542 ... 33
334543 ... 33
334562 ... 33
33536114 ... 61
33576114 ... 61
340141 ... 28
340161 ... 28
340341 ... 29
340361 ... 29
340707 ... 28
340821 ... 27
340831 ... 27
340841 ... 27
340851 ... 27
340871 ... 27
344132 ... 31
344133 ... 31
344142 ... 31
344143 ... 31
344172 ... 31
344173 ... 31
344342 ... 32
344343 ... 32
344362 ... 32
344363 ... 32
344542 ... 33
344543 ... 33
344562 ... 33
344563 ... 33
345051 ... 39
345132 ... 31
345133 ... 31
345142 ... 31
345143 ... 31
345162 ... 31
345163 ... 31
345342 ... 32
345343 ... 32
345362 ... 32
345363 ... 32
345542 ... 33
345543 ... 33
345562 ... 33
345563 ... 33
345662MS ... 65
345762 ... 31
350141 ... 28
350161 ... 28
350341 ... 29
350361 ... 29
350821 ... 27
350831 ... 27
350841 ... 27
350851 ... 27
350871 ... 27
351141 ... 28
351161 ... 28
351341 ... 29
351361 ... 29
351707 ... 28
351771KG ... 23
351841 ... 27
351851 ... 27
351871 ... 27
355133 ... 31
355142 ... 31
355143 ... 31
355162 ... 31
355163 ... 31
355342 ... 32
355362 ... 32
355363 ... 32
355542 ... 33
355543 ... 33
355562 ... 33
355563 ... 33
355762 ... 31
35E136 ... 39
35E146 ... 39
35E336 ... 39
35E846 ... 39
35E856 ... 39
35E876 ... 39
35E877 ... 39
360141 ... 28
360161 ... 28
360341 ... 29
360361 ... 29
360707 ... 28
360831 ... 27
360841 ... 27
360851 ... 27
360871 ... 27
361141 ... 28
361161 ... 28
361341 ... 29
361361 ... 29
361821 ... 27
361831 ... 27
361841 ... 27
361851 ... 27
361871 ... 27
362141 ... 28
362161 ... 28
362272 ... 28
362341 ... 29
362361 ... 29
362707 ... 28
362831 ... 27
362841 ... 27
362851 ... 27
362852 ... 27
362871 ... 27
365132 ... 31
365133 ... 31
365142 ... 31
365143 ... 31
365172 ... 31
365173 ... 31
365342 ... 32
365343 ... 32
365362 ... 32
365363 ... 32
365542 ... 33
365543 ... 33
365562 ... 33
365563 ... 33
365763 ... 31
366142 ... 31
366143 ... 31
366162 ... 31
366163 ... 31
366342 ... 32
366343 ... 32
366362 ... 32
366363 ... 32
366542 ... 33
366543 ... 33
366562 ... 33
366563 ... 33
366762 ... 31
36E146 ... 39
36E176 ... 39
36E846 ... 39
36E847 ... 39
36E856 ... 39
36E876 ... 39
36E877 ... 39
370141 ... 28
370161 ... 28
370241KG ... 46
370242KG ... 46
370271KG ... 46
370272 ... 28
370272KG ... 46
370341 ... 29
370361 ... 29
370441KG ... 46
370442KG ... 46
370471KG ... 46
370472KG ... 46
370841 ... 27
370851 ... 27
370852 ... 27
370871 ... 27
371141 ... 28
371161 ... 28
371341 ... 29
371361 ... 29
371841 ... 27
371851 ... 27
371871 ... 27
372831 ... 27
372841 ... 27
372851 ... 27
372871 ... 27
376142 ... 31
376162 ... 31
376163 ... 31
376342 ... 32
376343 ... 32
376362 ... 32
376363 ... 32
376542 ... 33
376543 ... 33
376562 ... 33
377043 ... 45
37704300 ... 45
377043T1 ... 45
377043TA ... 45
377044 ... 46
37704400 ... 46
377044T1 ... 46
377044TA ... 46
377045 ... 45
377047 ... 46
377048 ... 45
377049 ... 46
377051 ... 45
37705100 ... 45
377051T1 ... 45
377051TA ... 45
377052 ... 45
377053 ... 45
37705300 ... 45
377053T1 ... 45
377053TA ... 45
377054 ... 45
37705400 ... 45
377054T1 ... 45
377054TA ... 45
377059 ... 45
377063 ... 45
37706300 ... 45
377063T1 ... 45
377063TA ... 45
377066 ... 45
377077 ... 45
377089 ... 46
37708900 ... 46
377089T1 ... 46
377089TA ... 46
377090 ... 46
377091 ... 47
37709100 ... 47
377093 ... 46
377094 ... 46
37709400 ... 46
377094T1 ... 46
377094TA ... 46
377095 ... 45
377096 ... 45
377097 ... 46
377099 ... 46
377142 ... 31
377143 ... 31
377144 ... 31
377162 ... 31
377163 ... 31
377164 ... 31
37724030 ... 49
37724046 ... 49
37724060 ... 49
37727030 ... 49
37727046 ... 49
37727060 ... 49
37729030 ... 49
37729046 ... 49
37729060 ... 49
377342 ... 32
377343 ... 32
377362 ... 32
377363 ... 32
37744030 ... 49
37744046 ... 49
37744060 ... 49
37747030 ... 49
37747046 ... 49
37747060 ... 49
37749030 ... 49
37749046 ... 49
37749060 ... 49
377562 ... 33
377707 ... 46
37770700 ... 46
377707T1 ... 46
377707TA ... 46
377762 ... 31
37778030 ... 49
37778046 ... 49
37778060 ... 49
377824 ... 47
37782400 ... 47
377824T1 ... 47
377824TA ... 47
37783030 ... 49
37783046 ... 49
37783060 ... 49
377835 ... 47
37783500 ... 47
377835T1 ... 47
377835TA ... 47
377837 ... 47
377839 ... 47
377854 ... 47
37785400 ... 47
377854T1 ... 47
377854TA ... 47
377875 ... 47
37787500 ... 47
377875T1 ... 47
377875TA ... 47
37E137 ... 39
37E147 ... 39
37E336 ... 39
380141 ... 28
380161 ... 28
380341 ... 29
380361 ... 29

Art. No. Page

380841 ... 27
380851 ... 27
380871 ... 27
381161 ... 28
381361 ... 29
381831 ... 27
381841 ... 27
381851 ... 27
381871 ... 27
387051 ... 45
387053 ... 45
387054 ... 45
387055 ... 45
387142 ... 31
387143 ... 31
387162 ... 31
387163 ... 31
38724046 ... 49
38727046 ... 49
38729046 ... 49
387342 ... 32
387343 ... 32
387362 ... 32
387363 ... 32
38744046 ... 49
38747046 ... 49
38749046 ... 49
387562 ... 33
38778046 ... 49
387824 ... 47
38783046 ... 49
388172 ... 31
388173 ... 31
38824046 ... 49
38824060 ... 49
38827046 ... 49
38827060 ... 49
38829046 ... 49
38829060 ... 49
38844046 ... 49
38844060 ... 49
38847046 ... 49
38847060 ... 49
38849046 ... 49
38849060 ... 49
38878046 ... 49
38878060 ... 49
38883046 ... 49
38883060 ... 49
38T841 ... 27
38T851 ... 27
397142 ... 31
397143 ... 31
397172 ... 31
397173 ... 31
397362 ... 32
397562 ... 33
402880 ... 35
402880CC ... 127
402881 ... 35
402882 ... 35
402883 ... 35
402890 ... 35
402891 ... 35
402892 ... 35
402893 ... 35
405006 ... 140
405835 ... 140
405843 ... 35
405844 ... 35
405845 ... 35
405845CC ... 127
405854 ... 140
405864 ... 140
405905 ... 140
405908 ... 140
408819DB ... 39
408829DB ... 39
408839DB ... 39
410001SB ... 81
410001WB ... 81
410001ZH ... 81
410002SB ... 81
410002WB ... 81
410002ZH ... 81
410003SB ... 81
410003WB ... 81
410003ZH ... 81
410031 ... 81
410032 ... 81
410033 ... 81
410122 ... 124
410123 ... 124
41012307 ... 128
41012309 ... 126
410132 ... 124
410133 ... 124
41013307 ... 128
41013309 ... 126
410134 ... 125
410135 ... 125
41013509 ... 126
410136 ... 124
41013607 ... 128
41013609 ... 126
410138 ... 124
41013807 ... 128
41013809 ... 126
410152 ... 124
41015209 ... 126
410153 ... 124
41015307 ... 128
41015309 ... 126
410154 ... 124
410155 ... 124
410156 ... 124
410158 ... 124
41015807 ... 128
41015809 ... 126
410159 ... 124
410173 ... 124
410183 ... 124
410185 ... 124
410221 ... 81
410222 ... 81
410223 ... 81
410321 ... 81
410322 ... 81
410323 ... 81
410521 ... 81
410522 ... 81
410523 ... 81
410801 ... 81
410802 ... 81
410803 ... 81
410811DB ... 81
410812DB ... 81
410813DB ... 81
410871 ... 81
410871A0 ... 81
410872 ... 81
410872A0 ... 81
410873 ... 81
410873A0 ... 81
410881 ... 81
410882 ... 81
410883 ... 81
410891 ... 81
410891A0 ... 81
410892 ... 81
410892A0 ... 81
410893 ... 81
410893A0 ... 81
411132 ... 70
411142 ... 70
411342 ... 71
411542 ... 71
413132 ... 70
413133 ... 70
413142 ... 70
413143 ... 70
413162 ... 70
413163 ... 70
413342 ... 71
413343 ... 71
413362 ... 71
413363 ... 71
413542 ... 71
413543 ... 71
413841 ... 71
413871 ... 71
414132 ... 70
414133 ... 70
414142 ... 70
414143 ... 70
414162 ... 70
414163 ... 70
414192 ... 70
414193 ... 70
414342 ... 71
414343 ... 71
414362 ... 71
414462 ... 71
414542 ... 71
414543 ... 71
414752 ... 70
414842 ... 71
414872 ... 71
415132 ... 70
415133 ... 70
415142 ... 70
415143 ... 70
415160 ... 69
415162 ... 70
415163 ... 70
415192 ... 70
415193 ... 70
415301 ... 71
415302 ... 71
415342 ... 71
415343 ... 71
415362 ... 69
415363 ... 71
415462 ... 71
415542 ... 71
415543 ... 71
415752 ... 70
415753 ... 70
415842 ... 71
415852 ... 71
415872 ... 71
416132 ... 70
416133 ... 70
416142 ... 70
416143 ... 70
416160 ... 69
416162 ... 70
416163 ... 70
416193 ... 70
416302 ... 71
416303 ... 71
416342 ... 71
416343 ... 71
416362 ... 71
416363 ... 71
416462 ... 71
416542 ... 71
416543 ... 71
416752 ... 70
417132 ... 70
417133 ... 70
417142 ... 70
417143 ... 70
417160 ... 69
417162 ... 70
417163 ... 70
417168 ... 69
417192 ... 70
417196 ... 70
417198 ... 69
41719807 ... 128
41719809 ... 126
41719811 ... 69
417199 ... 69
417306 ... 71
417309 ... 71
417342 ... 71
417343 ... 71
417362 ... 71
417363 ... 71
417398 ... 69
417399 ... 69
417462 ... 71
417542 ... 71
417543 ... 71
417752 ... 70
417842 ... 71
417852 ... 71
417872 ... 71
418142 ... 70
418143 ... 70
418162 ... 70
418163 ... 70
418192 ... 70
418342 ... 71
418343 ... 71
418362 ... 71
418363 ... 71
418462 ... 71
418542 ... 71
418543 ... 71
418704 ... 70
418752 ... 70
418803 ... 70
418842 ... 71
418852 ... 71
418872 ... 71
421147 ... 58
421164 ... 58
42116409 ... 126
421167 ... 58
42116707 ... 58
42116709 ... 58
421167CC ... 127
421197 ... 58
421364 ... 58
421367 ... 58
421367CC ... 127
42136709 ... 126
421564 ... 58
421567 ... 58
421767 ... 58
421827 ... 58
421857 ... 58
422177 ... 61
42217709 ... 126
422367 ... 61
422767 ... 61
423167 ... 58
42316709 ... 126
423168 ... 58
423367 ... 58
423368 ... 58
424147 ... 58
424171 ... 58
424177 ... 58
424178 ... 58
424197 ... 58
424198 ... 58
424361 ... 58
424367 ... 58
424368 ... 58
424567 ... 58
426147 ... 58
426171 ... 58
426177 ... 58
426178 ... 58
426191 ... 58
426197 ... 58
426198 ... 58
426361 ... 58
426367 ... 58
426368 ... 58
426567 ... 58
426568 ... 58
426701 ... 58
426707 ... 58
426767 ... 58
427147 ... 58
427171 ... 58
427177 ... 58
427178 ... 58
427297 ... 58
427298 ... 58
427367 ... 58
427567 ... 58
427661MS ... 65
429171 ... 58
429177 ... 58
429178 ... 58
429191 ... 58
429197 ... 58
429198 ... 58
429367 ... 58
430001WB ... 81
430001SB ... 81
430001ZH ... 81
430002WB ... 81
430002SB ... 81
430002ZH ... 81
430031 ... 81
430032 ... 81
430122 ... 125
43012209 ... 126
430123 ... 125
43012307 ... 128
43012309 ... 126
430124 ... 125
430125 ... 125
430126 ... 125
43012607 ... 128
43012609 ... 126
430128 ... 73
43012807 ... 128
43012809 ... 126
430129 ... 73
430132 ... 125
430133 ... 125
43013307 ... 128
43013309 ... 126
430134 ... 125
430135 ... 125
430136 ... 125
430138 ... 73
43013807 ... 128
43013809 ... 126
430139 ... 71
430222 ... 81
430223 ... 81
430322 ... 81
430323 ... 81
430522 ... 81
430523 ... 81
430802 ... 81
430803 ... 81
430812DB ... 81
430813DB ... 81
430872 ... 81
430872A0 ... 81
430873 ... 81
430873A0 ... 81
430882 ... 81
430892A0 ... 81
430883 ... 81
430892 ... 81
430893 ... 81
430893A0 ... 81
434142 ... 73
434162 ... 73
434342 ... 73
434345 ... 73
434355 ... 73
434362 ... 73
434365 ... 73
434542 ... 73
435142 ... 73
435162 ... 73
435342 ... 73
435345 ... 73
435355 ... 73
435362 ... 73
435365 ... 73
435542 ... 73
435562 ... 73
436162 ... 73
436362 ... 73
437142 ... 73
437162 ... 73
437342 ... 73
437362 ... 73
437542 ... 73
446271 ... 59
446277 ... 59
446701 ... 59
446771 ... 59
446777 ... 59
446827 ... 59
446851 ... 59
446857 ... 59
447277 ... 59
447827 ... 59
447857 ... 59
450001SB ... 81
450001WB ... 81
450001ZH ... 81
450031 ... 81
450221 ... 81
450311 ... 81
450521 ... 81
450801 ... 81
450821DB ... 81
450871 ... 81
450871A0 ... 81
450881 ... 81
450891 ... 81
450891A0 ... 81
451131 ... 76
451141 ... 76
451160 ... 75
451161 ... 76
451162 ... 76
451191 ... 76
451192 ... 76
451258 ... 79
451261BD ... 76
451278 ... 79
451305 ... 77
451341 ... 77
451361 ... 77
451362 ... 77
451458 ... 79
451478 ... 79
451541 ... 77
451542 ... 77
451561 ... 77
542562 ... 77
451831 ... 75
451851 ... 75
451871 ... 75
452131 ... 76
452141 ... 76
452160 ... 75
452161 ... 76
452191 ... 76
452261BD ... 76
452278GH ... 79
452304 ... 77
452341 ... 77
452361 ... 77
452541 ... 77
452561 ... 77
452703 ... 76
452705 ... 76
452751 ... 76
452831 ... 75
452851 ... 75
453131 ... 76
453141 ... 76
453160 ... 75
453161 ... 76
453163 ... 76
453191 ... 76
453258 ... 77
453261BD ... 76
453278 ... 79
45327809 ... 126
453298 ... 79
453301 ... 77
453338 ... 79
453341 ... 77
453358 ... 79
453361 ... 77
453363 ... 77
453378 ... 79
453398 ... 79
453541 ... 77
453561 ... 77
453703 ... 76
453705 ... 76
453751 ... 76
453758 ... 79
453778 ... 79
453821 ... 125
454238 ... 79
454258 ... 79
454278 ... 79
454298 ... 79
454338 ... 79
454358 ... 79
454378 ... 79
45437809 ... 126
454398 ... 79
454758 ... 79
454778 ... 79
454831 ... 75
454851 ... 75
454871 ... 75
455161 ... 125
45516107 ... 128
45516109 ... 126
456131 ... 76
456141 ... 76
456160 ... 75
456161 ... 76
456163 ... 76
456191 ... 76
456258 ... 79
456261BD ... 76
456278 ... 79
456298 ... 79
456338 ... 79
456341 ... 77
456358 ... 79
456361 ... 77
456378 ... 79
456398 ... 79
456541 ... 77
456561 ... 77
456703 ... 76
456705 ... 76
456751 ... 76
456758 ... 79
456778 ... 79
456831 ... 75
456851 ... 75
456871 ... 75
458131 ... 76
458141 ... 76
458161 ... 76
458191 ... 76
458341 ... 77
458361 ... 77
458541 ... 77
458561 ... 77
460121 ... 75
460122 ... 75
466171 ... 75
466172 ... 75
469131 ... 75
469133 ... 75
469151 ... 75
469153 ... 75
469362 ... 75
470111 ... 17
470211 ... 17
471117 ... 17
47112K ... 18
47113K ... 18
47114K ... 18
471157 ... 61
471157SM ... 61
47120728 ... 21
47120828 ... 21
471217 ... 17
47122K ... 18
47123K ... 18
47124K ... 18
471254 ... 61
471257 ... 61
47125707 ... 128
47125709 ... 126
471257CC ... 127
47172K ... 18
47173K ... 18
47174K ... 18
471757 ... 61
47180728 ... 22
47180828 ... 22
471817 ... 17
47182K ... 18
47183K ... 18
47184K ... 18
471857 ... 61
472111 ... 17
472117 ... 17
47212K ... 18
47213K ... 18
47214K ... 18
472157 ... 61
47220132 ... 21
47220139 ... 21
472201EZ ... 21
47220732 ... 21
47220832 ... 21
472211 ... 17
472211SM ... 17
47221107 ... 128
47221109 ... 126
472211CC ... 127
472211WZ ... 17
472217 ... 17
47221709 ... 126
47222K ... 18
47223K ... 18
47224K ... 18
472257 ... 61
47225709 ... 126
472257SM ... 61
472257V4 ... 61
472257WZ ... 61
472711 ... 17
472717 ... 17
47272K ... 18
47273K ... 18
47274K ... 18
472757 ... 61
47280132 ... 22
47280139 ... 22
472801EZ ... 22
47280732 ... 22
47280832 ... 22
472811 ... 17
47281109 ... 126
472811WZ ... 17
472817 ... 17
47282K ... 18
47283K ... 18
47284K ... 18
472857 ... 61
47285709 ... 126
472857WZ ... 61
473111 ... 17
473117 ... 17
47312K ... 18
47313K ... 18
47314K ... 18
47320140 ... 21
473201EZ ... 21
47320740 ... 21
47320840 ... 21
473211 ... 17
47321124 ... 17
473211SM ... 17
473211WZ ... 17
473217 ... 17
473217WZ ... 17
47322K ... 18
47323K ... 18
47324K ... 18
47372K ... 18
47373K ... 18
47374K ... 18
473257 ... 61
473711 ... 17
47380140 ... 22
473801EZ ... 22
47380740 ... 22
47380840 ... 22
473811 ... 17
473811WZ ... 17
473817 ... 17
47382K ... 18
47383K ... 18
47384K ... 18
473857 ... 61
474111 ... 17
474117 ... 17
47412K ... 18
47413K ... 18
47414K ... 18
47420148 ... 21
47420748 ... 21
47420848 ... 21
474211 ... 17
474217 ... 17
47422K ... 18
47423K ... 18
47424K ... 18
474311 ... 17
474317 ... 17
47472K ... 18
47473K ... 18
47474K ... 18
47480148 ... 22
47480748 ... 22
47480848 ... 22
474811 ... 17
474817 ... 17
47482K ... 18
47483K ... 18
47484K ... 18
475111 ... 17

Art. No.	Page
475117	17
47512K	18
47513K	18
47514K	18
47520148	21
47520156	21
47520176	21
475201EZ	21
47520748	21
47520756	21
47520776	21
47520848	21
47520856	21
47520876	21
475211	17
475217	17
47522K	18
47523K	18
47524K	18
47525001	63
47525101	63
47526001	63
47526101	63
4752B176	23
4752W176	23
475311	17
475317	17
47572K	18
47573K	18
47574K	18
47580148	22
47580156	22
47580176	22
47580748	22
47580756	22
47580776	22
47580848	22
47580856	22
47580876	22
475811	17
475817	17
47582K	18
47583K	18
47584K	18
476111	17
47612K	18
47613K	18
47614K	18
47621051	17
476211	17
47622K	18
47623K	18
47624K	18
47625001	63
476250SM	63
47625101	63
476251SM	63
47626001	63
47626101	63
476311	17
47672K	18
47673K	18
47674K	18
47682K	18
47683K	18
47684K	18
47712K	18
47713K	18
47714K	18
47721075	17
47722K	18
47723K	18
47724K	18
47726001	63
47726101	63
47731075	17
47772K	18
47773K	18
47774K	18
47782K	18
47783K	18
47784K	18
47812K	18
47813K	18
47814K	18
47820006	19
47820008	19
47820010	19
47821075	17
47822506	19
47822508	19
47822510	19
47822K	18
47823K	18
47824K	18
47826001	63
47830006	19
47830008	19
47830010	19
47831075	17
47832506	19
47832508	19
47832510	19
47850006	19
47850008	19
47872K	18
47873K	18
47874K	18
47882K	18
47883K	18
47884K	18
47S20176	21
47S211	17
480117	54
480217	54
480717	57
482114	55
482117	55
48211709	126
482117SM	55
482214	55
48221409	126
482217	55
48221707	128
48221709	126
482217CC	127
482217SM	55
482217WZ	55
482317	55
482714	57
482717	57
482814	57
482817	57
48281709	126
482817WZ	57
483117	55
483217	55
483230	73
483317	55
483817	57
484111	56
484117	56
484118	56
484211	56
484217	56
484218	56
484311	56
484317	56
484318	56
484711	57
484717	57
484718	57
484811	57
484817	57
484818	57
485137	55
485237	55
485237CC	127
485237SM	55
485337	55
486111	56
486117	56
486118	56
486148	55
486211	56
486217	56
486218	56
486237	55
486248	55
486311	56
486317	56
486318	56
486348	55
486711	57
486717	57
486718	57
486811	57
486817	57
486818	57
487011MS	64
487111	56
487117	56
487118	56
487211	56
487217	56
487218	56
487237	55
487248	55
487311	56
487317	56
487318	56
487817	57
488237	55
488238	55
488248	55
499907	128
499921	128
4K7161	73
4K7361	73
4K9161	73
4K9361	73
500010	111
500016	111
500308	111
500310	111
500312	111
500313	111
500314	111
500315	111
500316	111
500318	111
500319	111
500320	111
500508	111
500510	111
500512	111
500513	111
500514	111
500515	111
500516	111
500518	111
500519	111
500520	111
500708	111
500710	111
500712	111
500713	111
500714	111
500715	111
500716	111
500718	111
500719	111
500720	111
500808	111
500810	111
500812	111
500813	111
500814	111
500815	111
500816	111
500818	111
500819	111
500820	111
501301	111
501501	111
501701	111
501801	111
50205024	111
50205224	111
50205524	111
50205824	111
50212003	129
50212024	112
50212224	112
50212524	112
50212824	112
50242024	112
50242224	112
50242524	112
50242824	112
50272024	112
50272224	112
50272524	112
50272824	112
50282024	112
50282224	112
50282524	112
503311	108
503313	108
503314	108
503316	108
503318	108
504301	109
504302	109
504333	109
504334	109
504335	109
504346	109
504347	109
50450106	109
50450206	109
50453306	109
50453406	109
50453506	109
50454606	109
50454706	109
506101	109
50610103	129
50610160	113
506106	112
506130	112
50613003	129
50613060	113
506132	112
506135	112
50613503	129
506138	112
506140	112
50614003	129
50614060	113
506144	112
506150	112
50615003	129
50615060	113
506157	112
50616060	113
506163	112
50616303	129
506169	112
506175	112
50617503	129
50618060	113
506182	112
506188	112
506194	112
506211	112
506220	112
506330	117
506340	117
506363	117
506401	112
506406	112
506411	112
506430	112
506432	112
506435	112
506438	112
506440	112
506444	112
506450	112
506457	112
506463	112
506469	112
506475	112
506482	112
506488	112
506494	112
506701	112
506706	112
506711	112
506720	112
506730	112
506732	112
506735	112
506738	112
506740	112
506744	112
506750	112
506757	112
506763	112
506769	112
506775	112
506782	112
506788	112
506794	112
506801	112
506806	112
506811	112
506820	112
506830	112
506832	112
506835	112
506838	117
506840	112
506844	112
506850	112
506857	112
506860	117
506863	112
506869	112
506875	112
506882	112
506888	112
506894	112
507001	115
507002	115
507003	115
507004	115
507005	115
507006	115
507007	115
507105	113
507190	113
507301	118
507302	118
507303	118
507304	118
507305	118
507307	118
507308	118
507959	118
52212024	112
52212224	112
52212524	112
52212824	112
526101	112
526106	112
526111	112
526130	112
526132	112
526135	112
526138	112
526140	112
526144	112
526150	112
526157	112
526163	112
526169	112
526175	112
526182	112
526188	112
526194	112
52930124	115
529302	115
529311	115
52931160	115
529811	115
532202	115
53220203	129
532203	115
53220303	129
532205	115
532211	115
53221460	113
532218	115
53221860	113
53230360	113
532703	117
532716	117
532718	117
53300824	115
53300924	117
53301024	115
533405	113
533408	113
540067	103
540068	103
540069	103
540070	103
540071	103
540072	103
540073	103
540074	103
540075	103
540076	103
540077	103
540078	103
540225	113
540321	113
540323	113
540324	113
540325	113
540327	113
541037	103
541039	103
541045	103
541076	103
541077	103
541079	103
541083	103
541084	103
541085	103
541087	103
541089	103
541093	103
541095	103
54120042	104
54120055	104
54120060	104
54120080	104
54120100	104
54120130	104
54120160	104
54120190	104
54120200	104
54120220	104
54120250	104
54120280	104
54120300	104
54120320	104
54120380	104
541301	125
54130107	128
54130109	126
541372	113
541373	113
542034	65
542301	107
542302	107
542303	107
542304	107
542305	107
542306	107
542307	107
542308	107
542309	107
542311	107
542313	107
542315	107
542319	107
542320	107
542347	107
542351	107
542381	107
542501	107
542502	107
542503	107
542504	107
542505	107
542506	107
542507	107
542508	107
542511	107
542513	107
542515	107
542519	107
542520	107
542538	107
542541	107
542542	107
542701	107
542702	107
542703	107
542704	107
542705	107
542706	107
542707	107
542708	107
542709	107
542711	107
542713	107
542715	107
542719	107
542720	107
542739	107
542740	107
542741	107
542801	107
542802	107
542803	107
542804	107
542807	107
542808	107
542811	107
542812	107
542813	107
542815	107
542818	107
542819	107
542820	107
542822	107
542823	107
542881	107
543006	65
54320022	104
54320026	104
54320032	104
54320055	104
54320060	104
54320080	104
54320100	104
54320130	104
54320160	104
54320190	104
54320220	104
54320250	104
54320280	104
54320300	104
54320320	104
543926	65
544301	116
544302	116
544307	117
544361	117
544804	116
54520012	104
54520019	104
54520022	104
54520026	104
54520032	104
54520042	104
54520055	104
54520060	104
54520080	104
54520100	104
54520130	104
54520160	104
54520190	104
54520220	104
54520250	104
54520280	104
54520300	104
54520320	104
545303	117
545307	116
545311	116
545312	116
545320	116
545321	116
545322	116
545331	117
545338	116
546302	118
546304	118
546306	118
546314	118
546318	118
546906	118
546908	118
547303	107
547307	107
547311	107
547313	107
547315	107
547703	107
547707	107
547711	107
547713	107
547715	107
547803	107
547807	107
547811	107
547813	107
547815	107
549101	113
549102	113
549103	113
549104	113
549105	113
549106	113
549107	113
549108	113
551801	116
551811	117
551812	117
552403	116
552404	116
552811	117
552816	117
553711	116
554903	116
559713	117
559802	106
559803	106
559804	106
559805	106
559806	106
559807	106
559810	106
560310	108
560315	108
560320	108
560325	108
560330	108
560510	108
560515	108
560520	108
560525	108
560530	108
560710	108
560715	108
560720	108
560725	108
560730	108
561304	108
562508	120
562510	120
562512	120
562515	120
562518	120
562522	120
562528	120
562535	120
563301	121
564101	116
56422060	105
56422080	105
564301	116
56506100	105
56506130	105
56506160	105
56506200	105
56506250	105
56532100	105
56532130	105
56532160	105
56532190	105
56532210	105
56532240	105
56532250	105
56532290	105
56532320	105
56534100	105
56534130	105
56534160	105
56534190	105
56534200	105
56534210	105
56534250	105
56534290	105
56534320	105
56552100	105
56552130	105
56552160	105
56552190	105
56552250	105
56554160	105
56554190	105
56554250	105
56554290	105
56554320	105
56573080	105
56573100	105
56573130	105
56573160	105
56574250	105
566601	119
566602	119
566603	119
566701	119
566702	119
566703	119
567201	119
567601	119
567671	119
567701	119
567731	119
567771	119
568802	119
568805	119
568806	119
570907	121
570910	121
599001	119
599002	119
599921	117
599931	117
599962	117
599991	117
60000083	137
60000084	137
60113110	137
60123110	137
60133110	137
60143110	137
60153110	137
60214110	137
60224110	137
60234110	137
60244110	137
60245110	137
60314110	137
60324110	137
60334110	137
60344110	137
60354110	137
60414110	137
60418110	137
60424110	137
60428110	137
60434110	137
60438110	137
60444110	137
60448110	137
60454110	137
60458110	137
60515110	137
60518110	137
60525110	137
60528110	137
60535110	137
60538110	137
60545110	137
60548110	137
60555110	137
60558110	137

In the course of further technical developments, the right is reserved to change the construction and appearance of the brushes without prior notice. Indications of size are approximate and without obligation or recourse to third parties.

Bold printed item numbers
are always on stock.
Italic printed articles
as well as special brushes will be produced for you with a short delivery time.
Please also see our terms on page 152.

EAN
All packaging units are marked with an EAN Code. This symbol shows, which articles are marked with an EAN Code in particular.

Keyword Index

Article	Page
Accessoires Wheel Brushes	40 - 41
Adapter Sets	40 - 41
Adapter Threads	119
Band Saw Brushes	36 - 37
Battery Terminal Brushes	119
Bevel Brushes	60 - 61
Blister packaging	126
Boiler Brushes	114 - 116
Boiler Brushes-Sets	117
Bore Hole Cleaning Brushes	109
Brake Caliper Bruhes ROKI	86
Bricklayer's Brushes	93
Brooms	94 - 95
Brushes for grass trimmers	62 - 63
Brushes for wood working	36 - 37
Brushes removing wet storage stain	90 - 91
Brushes wich are poor in spark	64 - 65
Brushes with carbon fibre	134 - 135
Chimney Brushes	114 - 115
Cup and Bevel Brushes	**52 - 65**
Cup Brushes, abrasive filament	58
Cup Brushes, brass coated steel wire	58
Cup Brushes, crimped wire	58
Cup Brushes, knotted	54 - 57
Cup Brushes with Shank	72 - 73
Cup Brushes, straight filament	59
Cutback Brushes	24 - 25
Cut Cases	127
Cylinder Brushes	106 - 108
Deburring Brushes	**42 - 51**
Deburring End Brushes	50 - 51
Deburring Wheel Brushes	44 - 47
Disc Brushes	139 - 141
Displaybox	128
DIY Brushes	**122 - 131**
DIY Brush Sortiments	124 - 129
Drive Arbors	40 - 41
Dusters	96 - 97
End Brushes, knotted	78 - 79
End Brushes with Shank	74 - 77
File Cards	93
File Cleaners	93
Fine Scratch Brushes	89
Fitting Brushes	120
Hand Brushes and Brooms	**82 - 99**
Hand Brushes Export Model	87
Hand Brushes Heavy Duty	87
Hand Brushes Rectangular and Violin	91
Hand Brushes Standard	85
Hand Brushes with Plastic Handle	86
Hand Brushes with Scraper	87
Hand Brushes with Strap	91
Hand Brushes with Two-Components Handles	86
Handles and Extensions	119
Hanger assembly for tube brushes	129
HFB	136 - 137
Hole Cleaning Brushes	108
Industrial Brushes	**132 - 147**
Interior Brushes	**100 - 121**
Joint Cleaning Brushes	19
Knotted Wheel Brushes	16 - 18
Lath Brushes	142 - 143
Metal Discs Spare Parts	40 - 41
Mikroabrasive Interior Brushes	102 - 104
Mikro Interior Brushes	105
Miniature Brushes	80 - 81
Packaging and Presentation	126 - 129
Pipeline Brushes	20 - 23
Plasterer's Brushes	93
Radiator Brushes	74
Rivet Brushes	87
Roller Brushes	48 - 49
Rust Scratcher	121
Satin Brushes	34 - 35
Scratchers	121
Scrubs	94 - 95
Shank Brushes	**66 - 81**
Single Segment Brushes	26 - 29
Sleeve Brushes	113
Small Diameter crimped Wheels	38 - 39
Soldering Fluid Brushes	121
Soluble Oil Brushes	121
Spark Plug Brushes	88
Special Brushes	89
Special Hand Brushes	90 - 93
Special Wheel Brushes	36 - 37
Spiked Rollers	93
Staining Brushes	92
Stove Pipe Brushes	118
Strip Brushes	146 - 147
Stripping Brushes	36 - 37
Structuring Brushes	68, 70
Tube Brushes	110 - 111
Universal Wire Brushes	87
Wheel Brushes	**14 - 41**
Wheel Brushes for the treatment of hard metal	39
Wheel Brushes with Shank	68 - 71
Wheel Brushes with Thread	60 - 61
Weed Brooms	98 - 99
Weed Brushes	98 - 99
Wide Face Brushes	144 - 145

General Conditions of Sale and Delivery

Dear customer, you can find the full version of our general conditions under www.lessmann.com
The most important conditions are:

1. Scope
Our general conditions of sale apply exclusively; we do not acknowledge any conditions of the customer which are contrary to or deviate from our general conditions of sale, unless we explicitly consented in writing to their validity. All agreements reached between us and the customer for the purpose of carrying out this contract must be made in writing. This applies also to offers and orders which were agreed with our sales representatives. Our general conditions of sale shall apply only to commercial businesses, not to private consumers.

2. Offer
All prices contained in an offer are subject to alterations. The prices are valid as fixed prices for 6 months, only after acknowledgement of the order. We reserve rights of ownership and copyrights on diagrams, drawings, design worksheets and other documents; they must not be made accessible to third parties.

3. Prices – Terms of Payment
All prices are in € (EURO), ex works Oettingen, exclusive costs of packaging. Our prices do not include Value-Added Tax. Unless stated otherwise in the acknowledgement of the order we grant 2% cash discount on payments in cash made within 10 days after the date of the invoice, payments shall be made within 30 days from the date of the invoice. In case of a delayed payment, we are entitled to demand interest at a rate of 4% p.a. above the actual basis rate of the EZB.

6. Reservation of Ownership
The customer shall obtain ownership of the delivered products only after we have received all payments from the business relationship with the customer. In the event of seizures or other actions by third parties, the customer shall inform us thereof immediately in writing. As far as the third party is not able to reimburse our total costs of legal action in accordance with paragraph 771 of the German Code of Civil Procedure, the customer shall reimburse us the loss. The customer is entitled to sell the products. The customer shall assign all rights and titles arising from the further sale to us regardless of wheth er the products have been processed or not. The customer remains entitled to collect the payments from the sales. We shall not collect any payments except the customer is behind with payments and/or has gone bankrupt and/or has stopped payments. Any processing, marking or other changes of the products by the customer shall be done on our behalf. If we have to take back the products, the customer shall give us the name and address of the customer who wished the products to be processed, marked or changed. We shall, at the request of customer, release our rights and titles up to the amount which exceeds 20% of the value of our payment claim to be protected. The selection of the rights and titles to be released shall be at our discretion.

7. Place of Jurisdiction – Place of Performance – Law
Place of jurisdiction shall be the place of our office. We also may take proceedings against the customer at the place of its office. Our office is the place of performance, unless our acknowledgement of the order stated something different. The laws of the Federal Republic of Germany shall apply. The United Nations Convention on Contracts for the International Sale of Goods (CISG) shall not apply.

8. Miscellaneous
Special designs can not be taken back. Our deliveries may deviate from the agreed volume by +/- 15%.
The minimum order value, as well as extra payments for small volume purchases, are fixed in the actual price list. Quantities deviating from the standard packet will be increased or decreased to the corresponding standard packet, otherwise extra payments per incomplete packet will be charged in accordance with the actual price list.

Minimum order value:
For stock articles (**bold printed** articles):
net € 100,00

For special production and *italic printed* articles:
net € 250,00 / article

Extra payment for incomplete packets:
net € 3,50

Express delivery on extra charge available.

We reserve the right to change the construction and design of the brushes in the course of further technical developments. Information to measurements are approximate and not binding. All measurements are in mm.

The LESSMANN free dimension tolerances apply. Request these if necessary.

Purchase Order Form

LESSMANN®
THE GERMAN BRUSH COMPANY

Supplier
Lessmann GmbH
Lucas-Schultes-Str. 2
D-86732 Oettingen

Buyer
_____
_____
_____
_____

Date _____
Customer Number _____
Contact Person _____
Phone _____
E-Mail _____

Order Number: _____

Item Number	Article Name	Quantity	Price	Discount	Date of Delivery

Shipping Address (if different from above):
_____
_____
_____
_____

Billing Address (if different from above):
_____
_____
_____
_____

☐ **Electronic Order Confirmation to be sent to: E-Mail** _____

☐ **Electronic Invoice to be sent to: E-Mail** _____

For more information about our brush selection please visit our website www.lessmann.com/Products

We hereby accept the current „General Conditions of Sale and Delivery" of Lessmann GmbH as printed in the Lessmann catalogue on page 152 available to us.

_____
Buyer's Signature / Stamp

Lessmann GmbH | Lucas-Schultes-Str. 2 | D-86732 Oettingen i. Bayern
Phone: +49 (0) 9082 707 0 | Fax: +49 (0) 9082 707 78
Info@lessmann.com | www.lessmann.com

More information...

... found on our homepage!
www.lessmann.com

Beside the variety of languages (german, english, spanish, czech, turkish and russian) we also provide you with useful information.

For example you can download:

- the complete article-number-catalogue-side-index
- enquiry forms of the different special brushes
- notes regarding the filling materials e. g. tables of the chemical and physical characteristics
- our brochure "Brush-Know-How"
- safety and operating instructions
- ISO 9001 certificate
- general terms and conditions

Please also ask for our special leaflets:

- Deburring with Brushes
  Art. No. 99EGBENG
- Interior Brushes / Miniature Brushes
  Art. No. 99INBENG
- Disc Brushes
  Art. No. 99TBDEUENG
- Brush Know How
  Technical Advice
  Art. No. 99BKHENG

LESSMANN®

THE GERMAN BRUSH COMPANY

More than 10.000 solutions ...

As a constantly developing and producing specialist we are able to produce special brush models in both small and large series production runs. This is brought about by our own engineering, tool, and equipment building department in association with our modern machine facilities.

Lessmann GmbH
Lucas-Schultes-Str. 2
86732 Oettingen
Germany

Tel.: +49 9082 707-0
Fax: +49 9082 707-78

www.lessmann.com
info@lessmann.com

Accredited with DIN EN ISO 9001:2015

QUALITY MADE IN GERMANY